British Railways Board

LOCO. NUMBER	DIAGRAM NUMBER	LOCO. NUMBER	DIAGRAM NUMBER	LOCO. NUMBER	DIAGRAM NUMBER	LOCO. NUMBER	DIAGRAM NUMBER	LOCO. NUMBER	DIAGRAM NUMBER	LOCO. NUMBER	DIAGRAM NUMBER	LOCO. NUMBER	DIAGRAM NUMBER	LOCO. NUMBER	DIAGRAM NUMBER	LOCO. NUMBER	DIAGRAM NUMBER	LOCO. NUMBER	DIAGRAM NUMBER
70000	SL/7A/1	70045	SL/7A/2	73012	SL/5B/1	73057	SL/5B/9	73102	SL/5B/5	73147	SL/5B/2	75016	SL/4B/1	75061	SL/4B/3	76022	SL/4K/1	76067	SL/4K/2
70001	,,	70046	,,	73013	,,	73058	,,	73103	,,	73148	,,	75017	,,	75062	,,	76023	,,	76068	,,
70002	,,	70047	,,	73014	,,	73059	,,	73104	,,	73149	,,	75018	,,	75063	,,	76024	,,	76069	,,
70003	,,	70048	,,	73015	,,	73060	,,	73105	,,	73150	,,	75019	,,	75064	,,	76025	,,	76070	SL/4K/3
70004	,,	70049	,,	73016	,,	73061	,,	73106	,,	73151	,,	75020	,,	75065	SL/4B/2	76026	,,	76071	,,
70005	,,	70050	,,	73017	,,	73062	,,	73107	,,	73152	,,	75021	,,	75066	,,	76027	,,	76072	,,
70006	,,	70051	,,	73018	,,	73063	,,	73108	,,	73153	,,	75022	,,	75067	,,	76028	,,	76073	,,
70007	,,	70052	,,	73019	,,	73064	,,	73109	,,	73154	,,	75023	,,	75068	,,	76029	,,	76074	,,
70008	,,	70053	,,	73020	,,	73065	SL/5B/6	73110	SL/5B/7	73155	SL/5B/5	75024	,,	75069	,,	76030	,,	76075	,,
70009	,,	70054	,,	73021	,,	73066	,,	73111	,,	73156	,,	75025	,,	75070	,,	76031	,,	76076	,,
70010	,,			73022	,,	73067	,,	73112	,,	73157	,,	75026	,,	75071	,,	76032	,,	76077	,,
70011	,,			73023	,,	73068	,,	73113	,,	73158	,,	75027	,,	75072	,,	76033	,,	76078	,,
70012	,,			73024	,,	73069	,,	73114	,,	73159	,,	75028	,,	75073	,,	76034	,,	76079	,,
70013	,,			73025	,,	73070	,,	73115	,,	73160	,,	75029	,,	75074	,,	76035	,,	76080	,,
70014	,,	71000	SL/8A/2	73026	,,	73071	,,	73116	,,	73161	,,	75030	,,	75075	,,	76036	,,	76081	,,
70015	,,			73027	,,	73072	,,	73117	,,	73162	,,	75031	,,	75076	,,	76037	,,	76082	,,
70016	,,			73028	,,	73073	,,	73118	,,	73163	,,	75032	,,	75077	,,	76038	,,	76083	,,
70017	,,			73029	,,	73074	,,	73119	,,	73164	,,	75033	,,	75078	,,	76039	,,	76084	,,
70018	,,			73030	,,	73075	,,	73120	SL/5B/5	73165	,,	75034	,,	75079	,,	76040	,,	76085	,,
70019	,,	72000	SL/6A/1	73031	,,	73076	,,	73121	,,	73166	,,	75035	,,			76041	,,	76086	,,
70020	,,	72001	,,	73032	,,	73077	,,	73122	,,	73167	,,	75036	,,			76042	,,	76087	,,
70021	,,	72002	,,	73033	,,	73078	,,	73123	,,	73168	,,	75037	,,			76043	,,	76088	,,
70022	,,	72003	,,	73034	,,	73079	,,	73124	,,	73169	,,	75038	,,			76044	,,	76089	,,
70023	,,	72004	,,	73035	,,	73080	SL/5B/5	73125	SL/5B/2	73170	,,	75039	,,	76000	SL/4K/1	76045	SL/4K/3	76090	,,
70024	SL/7A/3	72005	,,	73036	,,	73081	,,	73126	,,	73171	,,	75040	,,	76001	,,	76046	,,	76091	,,
70025	,,	72006	,,	73037	,,	73082	,,	73127	,,			75041	,,	76002	,,	76047	,,	76092	,,
70026	,,	72007	,,	73038	,,	73083	,,	73128	,,			75042	,,	76003	,,	76048	,,	76093	,,
70027	,,	72008	,,	73039	,,	73084	,,	73129	,,			75043	,,	76004	,,	76049	,,	76094	,,
70028	,,	72009	,,	73040	,,	73085	,,	73130	,,			75044	,,	76005	,,	76050	,,	76095	,,
70029	,,			73041	,,	73086	,,	73131	,,	75000	SL/4B/1	75045	,,	76006	,,	76051	,,	76096	,,
70030	SL/7A/1			73042	,,	73087	,,	73132	,,	75001	,,	75046	,,	76007	,,	76052	,,	76097	,,
70031	,,			73043	,,	73088	,,	73133	,,	75002	,,	75047	,,	76008	,,	76053	SL/4K/2	76098	,,
70032	,,			73044	,,	73089	,,	73134	,,	75003	,,	75048	,,	76009	,,	76054	,,	76099	,,
70033	,,	73000	SL/5B/1	73045	,,	73090	SL/5B/6	73135	SL/5B/3	75004	,,	75049	,,	76010	,,	76055	,,	76100	,,
70034	,,	73001	,,	73046	,,	73091	,,	73136	,,	75005	,,	75050	SL/4B/3	76011	,,	76056	,,	76101	,,
70035	,,	73002	,,	73047	,,	73092	,,	73137	,,	75006	,,	75051	,,	76012	,,	76057	,,	76102	,,
70036	,,	73003	,,	73048	,,	73093	,,	73138	,,	75007	,,	75052	,,	76013	,,	76058	,,	76103	,,
70037	,,	73004	,,	73049	,,	73094	,,	73139	,,	75008	,,	75053	,,	76014	,,	76059	,,	76104	,,
70038	,,	73005	,,	73050	SL/5B/8	73095	,,	73140	,,	75009	,,	75054	,,	76015	,,	76060	,,	76105	,,
70039	,,	73006	,,	73051	,,	73096	,,	73141	,,	75010	,,	75055	,,	76016	,,	76061	,,	76106	,,
70040	,,	73007	,,	73052	,,	73097	,,	73142	,,	75011	,,	75056	,,	76017	,,	76062	,,	76107	,,
70041	,,	73008	,,	73053	SL/5B/9	73098	,,	73143	,,	75012	,,	75057	,,	76018	,,	76063	,,	76108	,,
70042	,,	73009	,,	73054	,,	73099	,,	73144	,,	75013	,,	75058	,,	76019	,,	76064	,,	76109	,,
70043	,,	73010	,,	73055	,,	73100	SL/5B/5	73145	SL/5B/2	75014	,,	75059	,,	76020	,,	76065	,,	76110	,,
70044	,,	73011	,,	73056	,,	73101	,,	73146	,,	75015	,,	75060	,,	76021	,,	76066	,,	76111	,,

LOCO. NUMBER	DIAGRAM NUMBER	LOCO. NUMBER	DIAGRAM NUMBER	LOCO. NUMBER	DIAGRAM NUMBER	LOCO. NUMBER	DIAGRAM NUMBER	LOCO. NUMBER	DIAGRAM NUMBER	LOCO. NUMBER	DIAGRAM NUMBER	LOCO. NUMBER	DIAGRAM NUMBER	LOCO. NUMBER	DIAGRAM NUMBER	LOCO. NUMBER	DIAGRAM NUMBER	LOCO. NUMBER	DIAGRAM NUMBER
76112	SL/4K/3	78014	SL/2K/1	78059	SL/2K/1	80035	SL/4LT/1	80080	SL/4LT/1	80125	SL/4LT/1	82011	SL/3VT/1	84007	SL/2VT/1	92018	SL/9R/4	92063	SL/9R/5
76113	"	78015	"	78060	"	80036	"	80081	"	80126	"	82012	"	84008	"	92019	"	92064	"
76114	"	78016	"	78061	"	80037	"	80082	"	80127	"	82013	"	84009	"	92020	SL/9R/2	92065	"
		78017	"	78062	"	80038	"	80083	"	80128	"	82014	"	84010	"	92021	"	92066	"
		78018	"	78063	"	80039	"	80084	"	80129	"	82015	"	84011	"	92022	"	92067	SL/9R/3
		78019	"	78064	"	80040	"	80085	"	80130	"	82016	"	84012	"	92023	"	92068	"
		78020	"			80041	"	80086	"	80131	"	82017	"	84013	"	92024	"	92069	"
77000	SL/3K/1	78021	"			80042	"	80087	"	80132	"	82018	"	84014	"	92025	"	92070	"
77001	"	78022	"			80043	"	80088	"	80133	"	82019	"	84015	"	92026	"	92071	"
77002	"	78023	"			80044	"	80089	"	80134	"	82020	"	84016	"	92027	"	92072	"
77003	"	78024	"	80000	SL/4LT/1	80045	"	80090	"	80135	"	82021	"	84017	"	92028	"	92073	"
77004	"	78025	"	80001	"	80046	"	80091	"	80136	"	82022	"	84018	"	92029	"	92074	"
77005	"	78026	"	80002	"	80047	"	80092	"	80137	"	82023	"	84019	"	92030	SL/9R/3	92075	"
77006	"	78027	"	80003	"	80048	"	80093	"	80138	"	82024	"	84020	"	92031	"	92076	"
77007	"	78028	"	80004	"	80049	"	80094	"	80139	"	82025	"	84021	"	92032	"	92077	SL/9R/4
77008	"	78029	"	80005	"	80050	"	80095	"	80140	"	82026	"	84022	"	92033	"	92078	"
77009	"	78030	"	80006	"	80051	"	80096	"	80141	"	82027	"	84023	"	92034	"	92079	"
77010	"	78031	"	80007	"	80052	"	80097	"	80142	"	82028	"	84024	"	92035	"	92080	"
77011	"	78032	"	80008	"	80053	"	80098	"	80143	"	82029	"	84025	"	92036	"	92081	"
77012	"	78033	"	80009	"	80054	"	80099	"	80144	"	82030	"	84026	"	92037	"	92082	"
77013	"	78034	"	80010	"	80055	"	80100	"	80145	"	82031	"	84027	"	92038	"	92083	"
77014	"	78035	"	80011	"	80056	"	80101	"	80146	"	82032	"	84028	"	92039	"	92084	"
77015	"	78036	"	80012	"	80057	"	80102	"	80147	"	82033	"	84029	"	92040	"	92085	"
77016	"	78037	"	80013	"	80058	"	80103	"	80148	"	82034	"			92041	"	92086	"
77017	"	78038	"	80014	"	80059	"	80104	"	80149	"	82035	"			92042	"	92087	SL/9R/3
77018	"	78039	"	80015	"	80060	"	80105	"	80150	"	82036	SL/3VT/1			92043	"	92088	"
77019	"	78040	"	80016	"	80061	"	80106	"	80151	"	82037	"			92044	"	92089	"
		78041	"	80017	"	80062	"	80107	"	80152	"	82038	"	92000	SL/9R/1	92045	SL/9R/4	92090	"
		78042	"	80018	"	80063	"	80108	"	80153	"	82039	"	92001	"	92046	"	92091	"
		78043	"	80019	"	80064	"	80109	"	80154	"	82040	"	92002	"	92047	"	92092	"
		78044	"	80020	"	80065	"	80110	"			82041	"	92003	"	92048	"	92093	"
78000	SL/2K/1	78045	"	80021	"	80066	"	80111	"			82042	"	92004	"	92049	"	92094	"
78001	"	78046	"	80022	"	80067	"	80112	"			82043	"	92005	"	92050	"	92095	"
78002	"	78047	"	80023	"	80068	"	80113	"			82044	"	92006	"	92051	"	92096	"
78003	"	78048	"	80024	"	80069	"	80114	"	82000	SL/3VT/1			92007	"	92052	"	92097	SL/9R/5
78004	"	78049	"	80025	"	80070	"	80115	"	82001	"			92008	"	92053	"	92098	"
78005	"	78050	"	80026	"	80071	"	80116	"	82002	"			92009	"	92054	"	92099	"
78006	"	78051	"	80027	"	80072	"	80117	"	82003	"			92010	SL/9R/3	92055	"	92100	SL/9R/4
78007	"	78052	"	80028	"	80073	"	80118	"	82004	"	84000	SL/2VT/1	92011	"	92056	"	92101	"
78008	"	78053	"	80029	"	80074	"	80119	"	82005	"	84001	"	92012	"	92057	"	92102	"
78009	"	78054	"	80030	"	80075	"	80120	"	82006	"	84002	"	92013	"	92058	"	92103	"
78010	"	78055	"	80031	"	80076	"	80121	"	82007	"	84003	"	92014	"	92059	"	92104	"
78011	"	78056	"	80032	"	80077	"	80122	"	82008	"	84004	"	92015	SL/9R/4	92060	SL/9R/5	92105	"
78012	"	78057	"	80033	"	80078	"	80123	"	82009	"	84005	"	92016	"	92061	"	92106	"
78013	"	78058	"	80034	"	80079	"	80124	"	82010	"	84006	"	92017	"	92062	"	92107	"

LOCO NUMBER	DIAGRAM NUMBER	LOCO NUMBER	DIAGRAM NUMBER	LOCO NUMBER	DIAGRAM NUMBER	LOCO NUMBER	DIAGRAM NUMBER	LOCO NUMBER	DIAGRAM NUMBER	LOCO NUMBER	DIAGRAM NUMBER	LOCO NUMBER	DIAGRAM NUMBER	LOCO NUMBER	DIAGRAM NUMBER	LOCO NUMBER	DIAGRAM NUMBER	LOCO NUMBER	DIAGRAM NUMBER
92108	SL/9R/4	92153	SL/9R/4	92198	SL/9R/3	92243	SL/9R/1												
92109	"	92154	"	92199	"	92244	"												
92110	"	92155	"	92200	"	92245	"												
92111	"	92156	"	92201	"	92246	"												
92112	"	92157	"	92202	"	92247	"												
92113	"	92158	"	92203	SL/9R/1	92248	"												
92114	"	92159	"	92204	"	92249	"												
92115	"	92160	"	92205	"	92250	"												
92116	"	92161	"	92206	"														
92117	"	92162	"	92207	"														
92118	"	92163	"	92208	"														
92119	"	92164	"	92209	"														
92120	"	92165	SL/9R/6	92210	"														
92121	"	92166	"	92211	"														
92122	"	92167	"	92212	"														
92123	"	92168	SL/9R/3	92213	"														
92124	"	92169	"	92214	"														
92125	"	92170	"	92215	"														
92126	"	92171	"	92216	"														
92127	"	92172	"	92217	"														
92128	"	92173	"	92218	"														
92129	"	92174	"	92219	"														
92130	"	92175	"	92220	"														
92131	"	92176	"	92221	"														
92132	"	92177	"	92222	"														
92133	"	92178	"	92223	"														
92134	"	92179	"	92224	"														
92135	"	92180	"	92225	"														
92136	"	92181	"	92226	"														
92137	"	92182	"	92227	"														
92138	"	92183	"	92228	"														
92139	"	92184	"	92229	"														
92140	SL/9R/3	92185	"	92230	"														
92141	"	92186	"	92231	"														
92142	"	92187	"	92232	"														
92143	"	92188	"	92233	"														
92144	"	92189	"	92234	"														
92145	"	92190	"	92235	"														
92146	"	92191	"	92236	"														
92147	"	92192	"	92237	"														
92148	"	92193	"	92238	"														
92149	"	92194	"	92239	"														
92150	SL/9R/4	92195	"	92240	"														
92151	"	92196	"	92241	"														
92152	"	92197	"	92242	"														

SL/2K/1

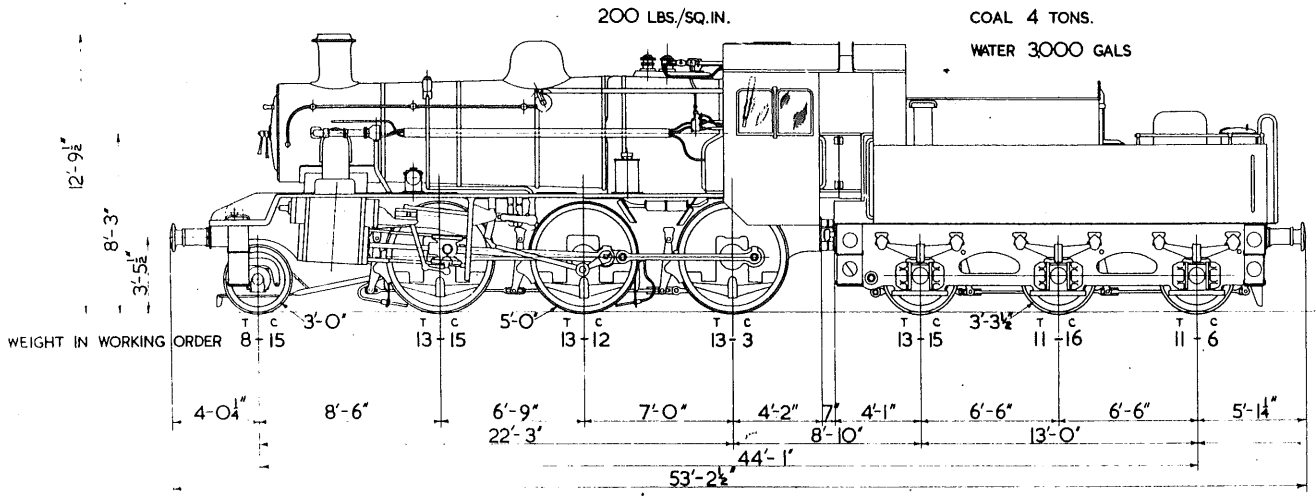

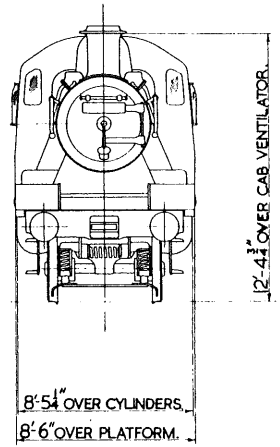

BOILER BARREL DIAMETER (OUTSIDE)		4'-3" INCREASING TO 4'-8"
FIREBOX (OUTSIDE)		5'-11" LONG x 4'-0 7/16" WIDE
TUBES		12 LARGE 5 1/8" O.D. x 7 S.W.G
		162 SMALL 1 5/8" O.D. x 12 S.W.G
SUPERHEATER ELEMENTS		1 3/8" O.D.
LENGTH BETWEEN TUBEPLATES		10'-10½"
HEATING SURFACES:	TUBES	924 SQ. FT.
	FIREBOX	101 SQ. FT.
	TOTAL EVAPORATIVE	1025 SQ. FT.
	SUPERHEATER	124 ~~134~~ SQ. FT.
FREE FLUE AREA		2·77 SQ. FT.
GRATE AREA.		17·5 SQ. FT.

CYLINDERS (TWO)	16½" DIA. x 24" STROKE
TRACTIVE EFFORT	18513 LBS.
ADHESION FACTOR	4·9
BRAKE % ENGINE & TENDER	60·23
MINIMUM RADIUS CURVE (WITH SPECIFIED GAUGE WIDENING)	4 CHAINS
BOILER TYPE	BR. 8
TENDER TYPE	BR. 3

WEIGHTS	FULL T C	EMPTY T C
ENGINE	49-5	45-8
TENDER	36-17	19-9
TOTAL	86-2	64-17

SCALE
0 2 4 6 8 10 FEET

STANDARD CLASS 2. 2-6-0 ENGINE.

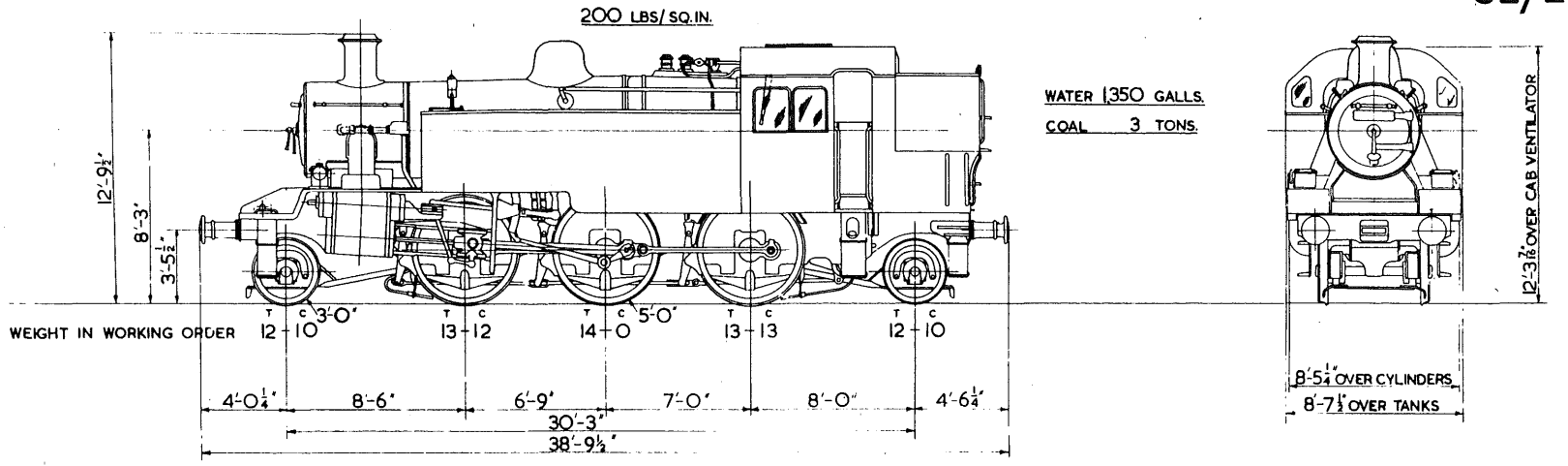

BOILER BARREL DIAMETER (OUTSIDE)	4'-3" INCREASING TO 4'-8"
FIREBOX (OUTSIDE)	5'-11" LONG x 4'-0 7/16" WIDE
TUBES	12 LARGE 5⅛" O.D. x 7 S.W.G.
	162 SMALL 1⅜" O.D. x 12 S.W.G.
SUPERHEATER ELEMENTS	1⅜" O.D.
LENGTH BETWEEN TUBEPLATES	10'-10½"
HEATING SURFACES :- TUBES	924 SQ. FT.
FIREBOX	101 SQ. FT.
TOTAL EVAPORATIVE	1,025 SQ. FT.
SUPERHEATER	124. ~~134~~ SQ. FT.
FREE FLUE AREA	2·77 SQ. FT.
GRATE AREA	17·5 SQ. FT.

CYLINDERS (TWO)	16½" DIA. x 24" STROKE
TRACTIVE EFFORT	18,513 LBS.
ADHESION FACTOR	5·0
BRAKE %	47
MINIMUM RADIUS CURVE (WITH SPECIFIED GAUGE WIDENING)	4 CHAINS
BOILER TYPE	B.R. 8

WEIGHTS	FULL T C	EMPTY T C
ENGINE	66-5	53-12

SCALE
0 2 4 6 8 10 FEET.

STANDARD CLASS 2. 2-6-2 TANK ENGINE.

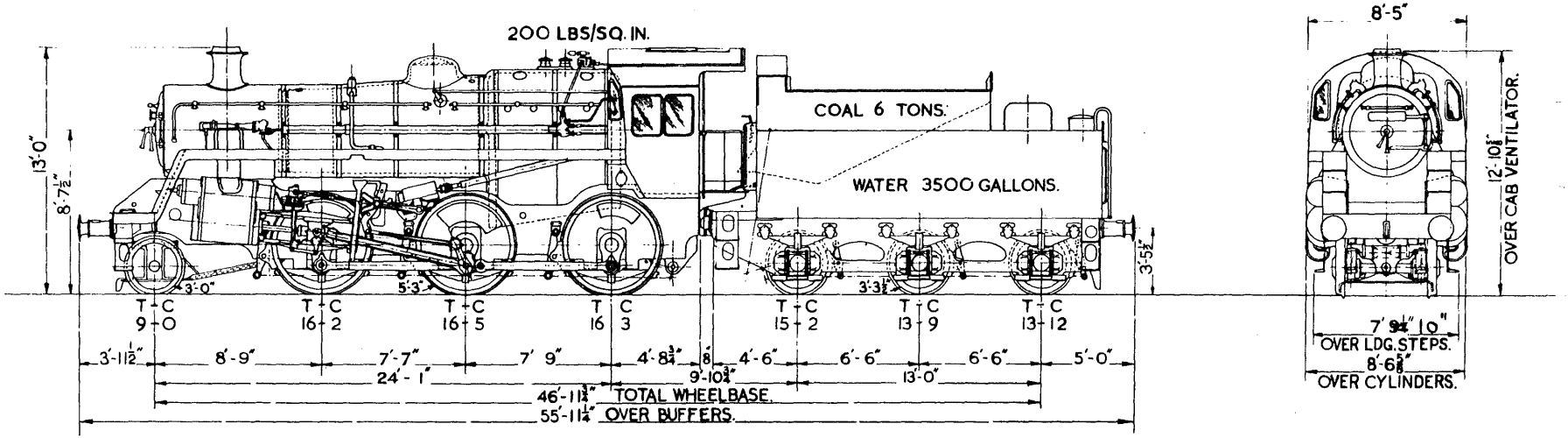

BOILER BARREL DIAMETER (OUTSIDE) — 4'-5" INCREASING TO 5'-0½".
FIREBOX (OUTSIDE) — 7'-0" LONG X 4'-0" WIDE.
TUBES — 18 LARGE 5⅛" O.D. X 7 S.W.G.
143 ~~145~~ SMALL 1⅝" O.D. X 12 S.W.G.
SUPERHEATER ELEMENTS — 1⅜" O.D. 10 S.W.G.
LENGTH BETWEEN TUBEPLATES — 10'-10½".
HEATING SURFACES TUBES 923·54 ~~932·90~~ SQ. FT.
FIREBOX 118·42 ~~118~~ " "
TOTAL EVAPORATIVE 1041·96 ~~1051·30~~ " "
SUPERHEATER 184 ~~190~~·00 " "
FREE FLUE AREA 3,054 ~~3·08~~ " "
GRATE AREA — 20·35 " "

CYLINDERS (TWO) — 17½" X 26".
TRACTIVE EFFORT — 21490 LBS.
ADHESION FACTOR — 5·05
BRAKE % ENGINE & TENDER — 60·7
MINIMUM RADIUS CURVE — 4½ CHAINS
(WITH SPECIFIED GAUGE WIDENING)
BOILER TYPE — BR. 6.
TENDER TYPE — BR. 2 A.

WEIGHTS	FULL	EMPTY
	T - C	T - C
ENGINE	57 - 10	53 - 0
TENDER	42 - 3	20 - 10
TOTAL	99 13	73 10

SCALE
0 1 2 3 4 5 6 7 8 9 10

STANDARD CLASS 3. 2-6-0 ENGINE.

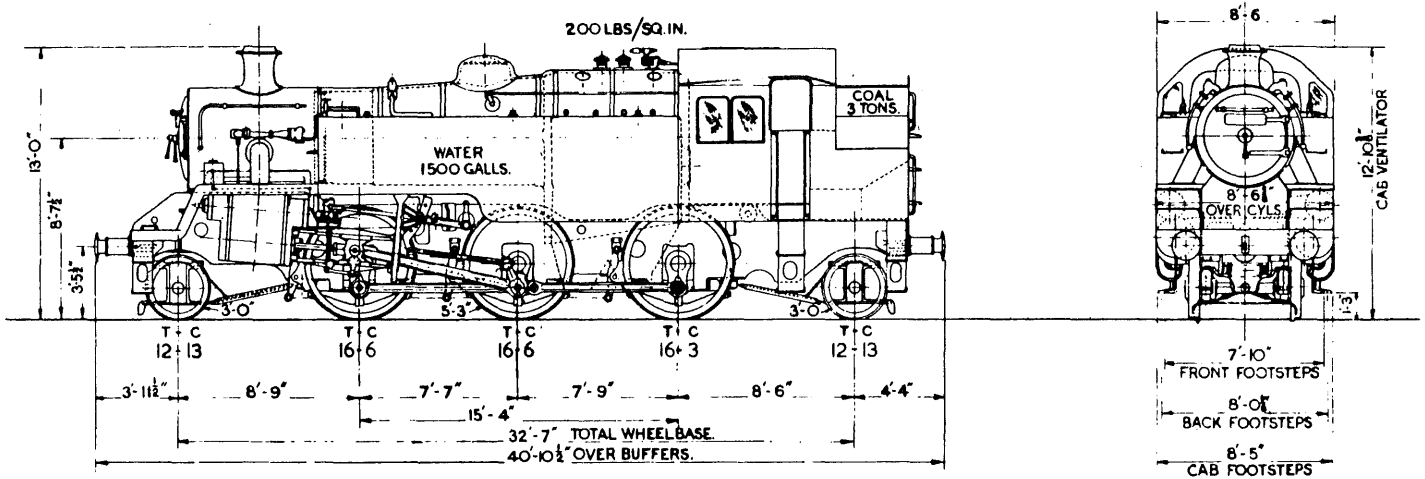

LEADING DIMENSIONS.

BOILER BARREL DIAMETER (OUTSIDE)	4'-5" INCREASING TO 5'-0½"
FIREBOX (OUTSIDE)	7'-0" LONG X 4'-0" WIDE.
TUBES	18 LARGE 5⅛" O.D. x 7 S.W.G.
	143 ~~145~~ SMALL 1⅝" O.D. x 12 S.W.G.
SUPERHEATER ELEMENTS	1⅜" O.D. 10 S.W.G.
LENGTH BETWEEN TUBEPLATES	10' 10½"
HEATING SURFACES. TUBES	923·54 ~~932·90~~ SQ.FT
FIREBOX	118·42 ~~118·40~~ " "
TOTAL EVAPORATIVE	1041·96 ~~1051·30~~ " "
SUPERHEATER	184 ~~190~~·00 " "
FREE FLUE AREA	3·054 ~~3·08~~ " "
GRATE AREA	20·35 " "

CYLINDERS (TWO)	17½" x 26"
TRACTIVE EFFORT	21490 LBS.
ADHESION FACTOR	5·08
BRAKE % ENGINE	51·5
MINIMUM RADIUS CURVE (WITH SPECIFIED GAUGE WIDENING)	4½ CHAINS.
BOILER TYPE	BR 6.

WEIGHTS.	FULL.	EMPTY.
	T - C	T - C
	74 - 1.	60 - 18.

SCALE
0 2 4 6 8 10 FEET

B R. STANDARD CLASS 3. 2-6-2 TANK ENGINE.

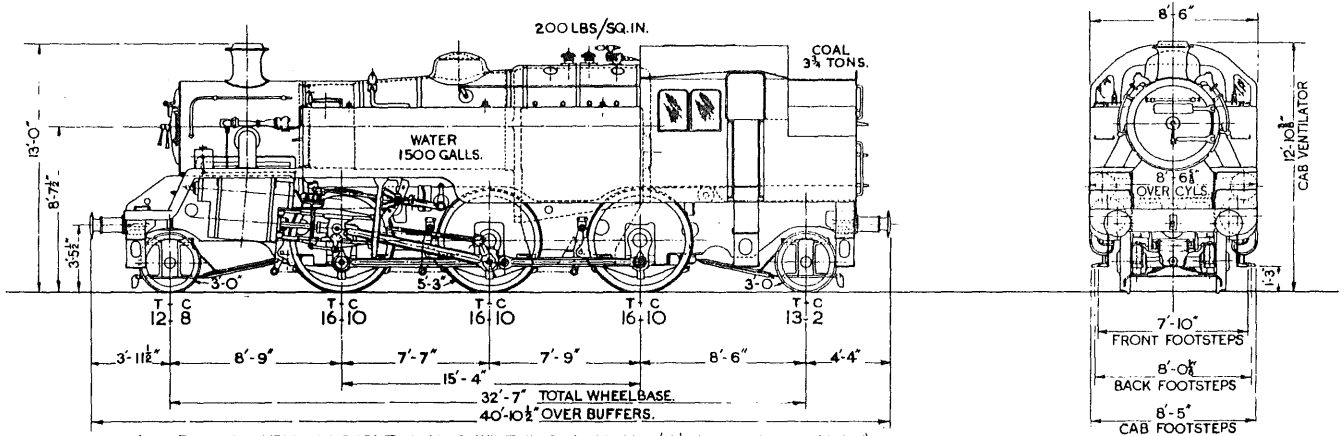

MINIMUM RADIUS CURVE WITHOUT GAUGE WIDENING 6 CHAINS (4½ CHAINS DEAD SLOW)

BOILER BARREL DIAMETER (OUTSIDE)		4'-5" INCREASING TO 5'-0½"
FIREBOX (OUTSIDE)		7'-0" LONG X 4'-0" WIDE.
TUBES		18 LARGE 5⅛" O.D. x 7 S.W.G.
		143 SMALL 1⅝" O.D. x 12 S.W.G.
SUPERHEATER ELEMENTS		1⅝" O.D. 9 S.W.G.
LENGTH BETWEEN TUBEPLATES		10' 10½"
HEATING SURFACES.	TUBES	923 ·54 SQ.FT
	FIREBOX	118 · 42 " "
TOTAL	EVAPORATIVE	1041 · 96 " "
	SUPERHEATER	184 · 50 " "
FREE FLUE AREA		3 ·054 " "
GRATE AREA		20 · 35 " "

CYLINDERS (TWO)	17½" x 26"
TRACTIVE EFFORT	21490 LBS.
ADHESION FACTOR	5·16
BRAKE % ENGINE	51·04
BOILER TYPE	BR 6.

WEIGHTS.	FULL.	EMPTY.
	T - C	T - C
	75 - 0.	61 - 2

SCALE
0 2 4 6 8 10 FEET

B R. STANDARD CLASS 3. 2-6-2 TANK ENGINE.

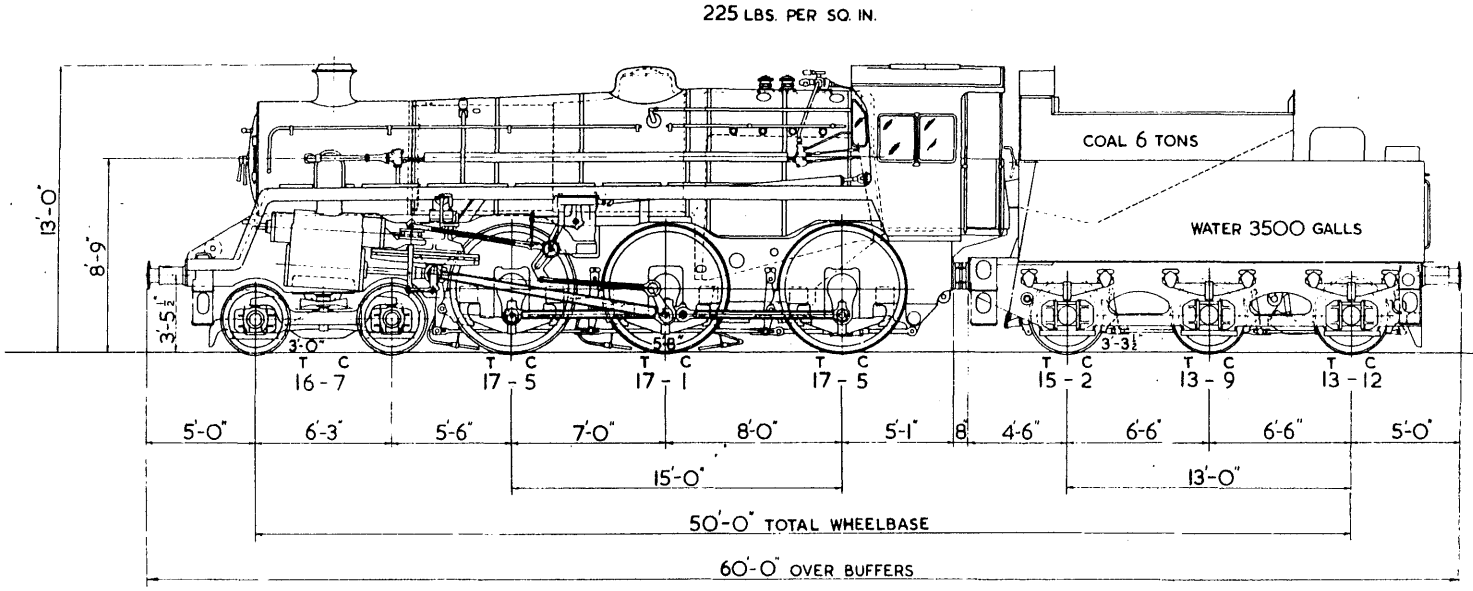

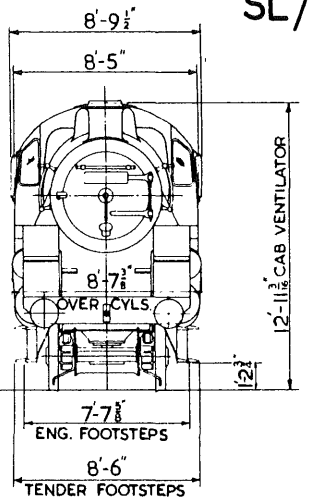

BOILER BARREL DIAMETER (OUTSIDE)	4'-9" INCREASING TO 5'-3"
FIREBOX (OUTSIDE)	8'-6" LONG × 4'-0½" WIDE
TUBES	21 LARGE 5⅛" O.D. × 7 SWG
	157 SMALL 1¾" O.D. 12 SWG
SUPERHEATER ELEMENTS	1⅛" O.D. × 10 SWG
LENGTH BETWEEN TUBEPLATES	13'-0"
HEATING SURFACES: TUBES	1301 SQ. FT.
FIREBOX	143 SQ. FT.
TOTAL EVAPORATIVE	1444 SQ. FT.
SUPERHEATER	265 SQ. FT.
FREE FLUE AREA	3·78 SQ. FT.
GRATE AREA	26·7 SQ. FT

CYLINDERS (TWO)	18" × 28"
TRACTIVE EFFORT	25,515 LBS.
ADHESION FACTOR	4·52
BRAKE % ENGINE & TENDER	55·1
MINIMUM RADIUS CURVE (WITH SPECIFIED GAUGE WIDENING)	5 ~~4½~~ CHAINS
BOILER TYPE	BR 4
TENDER TYPE	BR 2

WEIGHTS	FULL T C	EMPTY T C
ENGINE	67-18	63-6
TENDER	42-3	20-10
TOTAL	110-1	83-16

SCALE
0 2 4 6 8 10 FEET

B.R. STANDARD CLASS 4 4-6-0 ENGINE

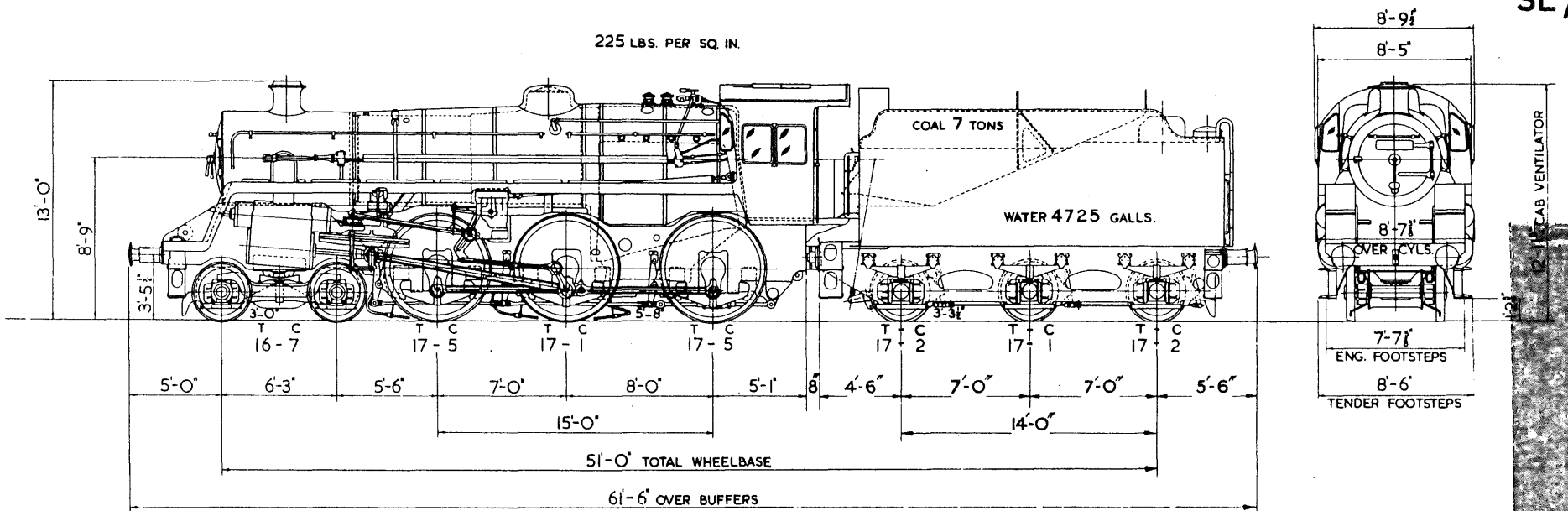

BOILER BARREL DIAMETER (OUTSIDE)	4'-9" INCREASING TO 5'-3"	
FIREBOX (OUTSIDE)	8'-6" LONG × 4'-0½" WIDE	
TUBES	21 LARGE 5⅛" O.D. × 7 S.W.G.	
	157 SMALL 1¾" O.D. × 12 S.W.G.	
SUPERHEATER ELEMENTS	1⅛" O.D. × 9 S.W.G.	
LENGTH BETWEEN TUBEPLATES	13'-0"	
HEATING SURFACES: TUBES	1301 SQ. FT.	
FIREBOX	143 SQ. FT.	
TOTAL EVAPORATIVE	1444 SQ. FT.	
SUPERHEATER	258 SQ. FT.	
FREE FLUE AREA	3·78 SQ. FT.	
GRATE AREA	26·7 SQ. FT.	

CYLINDERS (TWO)	18" × 28"
TRACTIVE EFFORT	25,515 LBS.
ADHESION FACTOR	4·52
BRAKE % ENGINE & TENDER	55
MINIMUM RADIUS CURVE (WITH SPECIFIED GAUGE WIDENING)	4½ CHAINS
BOILER TYPE	BR. 4.
TENDER TYPE	BR. 1B.

WEIGHTS	FULL T C	EMPTY T C
ENGINE	67-18	63-6
TENDER	51-5	23-3
TOTAL	119-3	86-9

SCALE
0 2 4 6 8 10 FEET

B.R. STANDARD CLASS 4. 4-6-0 ENGINE.

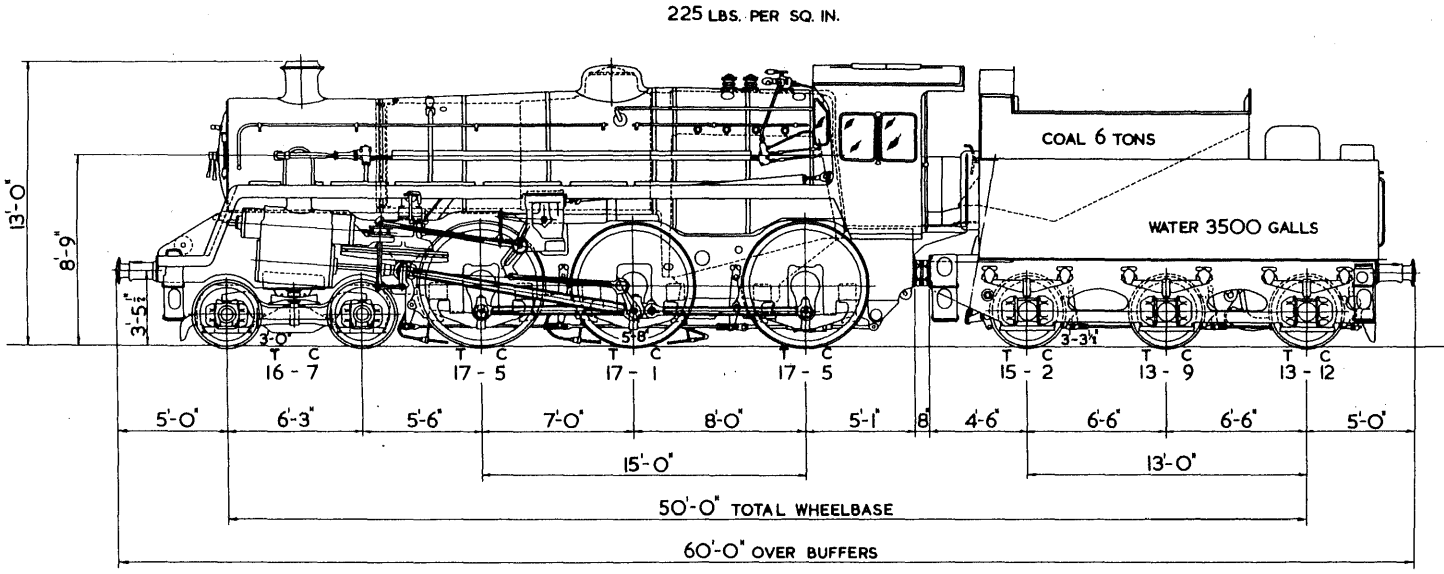

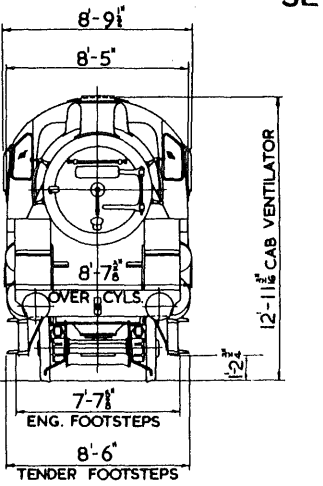

BOILER BARREL DIAMETER (OUTSIDE)	4'-9" INCREASING TO 5'-3"
FIREBOX (OUTSIDE)	8'-6" LONG x 4'-0⅛" WIDE
TUBES	21 LARGE 5⅛" O.D. x 7 S.W.G.
	157 SMALL 1¾" O.D. x 12 S.W.G.
SUPERHEATER ELEMENTS	1⅛" O.D. x 9 S.W.G.
LENGTH BETWEEN TUBEPLATES	13'-0"
HEATING SURFACES: TUBES	1301 SQ. FT.
FIREBOX	143 SQ. FT.
TOTAL EVAPORATIVE	1444 SQ. FT.
SUPERHEATER	258 SQ. FT.
FREE FLUE AREA	3·78 SQ. FT.
GRATE AREA	26·7 SQ. FT.

CYLINDERS (TWO)	18" x 28"
TRACTIVE EFFORT	25,515 LBS.
ADHESION FACTOR	4·52
BRAKE % ENGINE & TENDER	55·1
MINIMUM RADIUS CURVE WITHOUT GAUGE WIDENING	6 CHAINS (OR 4½ CHAINS DEAD SLOW)
BOILER TYPE	BR 4
TENDER TYPE	BR 2A

WEIGHTS	FULL T C	EMPTY T C
ENGINE	67-18	63-6
TENDER	42-3	20-10
TOTAL	110-1	83-16

SCALE
0 2 4 6 8 10 FEET

B.R. STANDARD CLASS 4. 4-6-0 ENGINE.

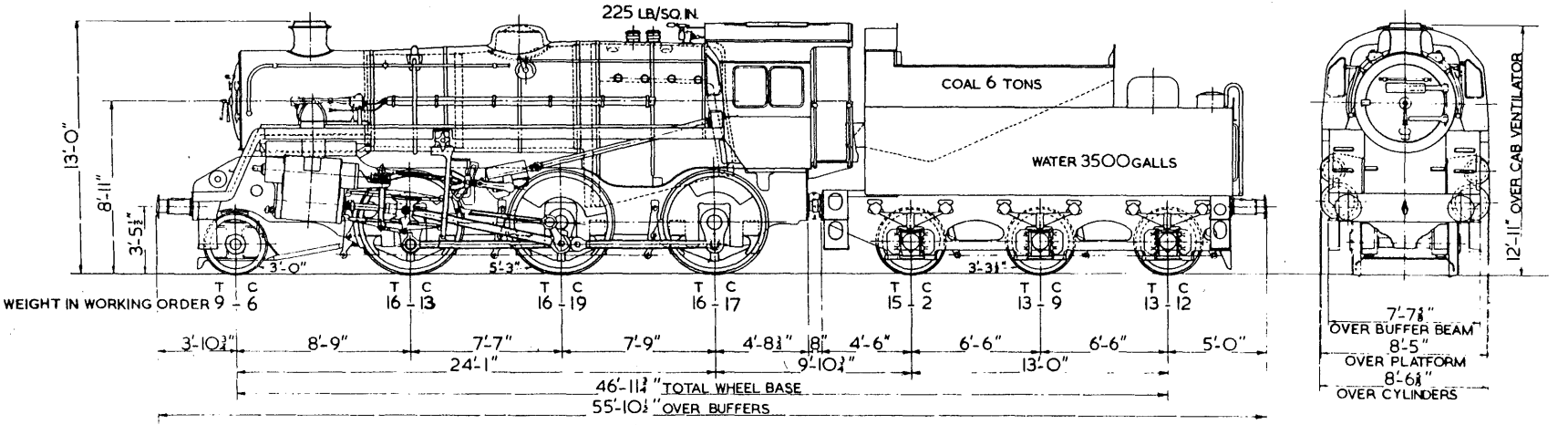

RADIUS OF MINIMUM CURVE. 4½ CHAINS. WITH APPROPRIATE GAUGE WIDENING

BOILER BARREL DIAMETER (OUTSIDE)	4'-9½" INCREASING TO 5'-3"	CYLINDERS (TWO)	17½" x 26"
FIREBOX (OUTSIDE)	7'-6" LONG x 4'-0½" WIDE	TRACTIVE EFFORT	24170 LB.
TUBES	24 LARGE 5⅛" O.D x 7 S.W.G	ADHESION FACTOR	4·68
	156 SMALL 1⅞" O.D x 12 S.W.G.	BRAKE % ENGINE & TENDER	63·75
SUPERHEATER ELEMENTS	1⅞" O.D x 9 S.W.G.		
LENGTH BETWEEN TUBEPLATES	10'-10½"		
HEATING SURFACES TUBES	1,075 SQ. FT	BOILER TYPE	BR. 7
FIREBOX	131 SQ. FT	TENDER TYPE	BR 2
TOTAL EVAPORATIVE	1,206 SQ. FT		
SUPERHEATER	247 SQ. FT		
FREE FLUE AREA	3·8 SQ. FT.		
GRATE AREA	23 SQ. FT		

WEIGHTS	FULL T C Q	EMPTY T C Q
ENGINE	59 - 15 - 0	55 - 18 - 2
TENDER	42 - 3 - 0	20 - 10 - 2
TOTAL	101 - 18 - 0	76 - 9 - 0

SCALE
0 1 2 3 4 5 6 7 8 9 10 FEET

STANDARD CLASS 4. 2-6-0 ENGINE

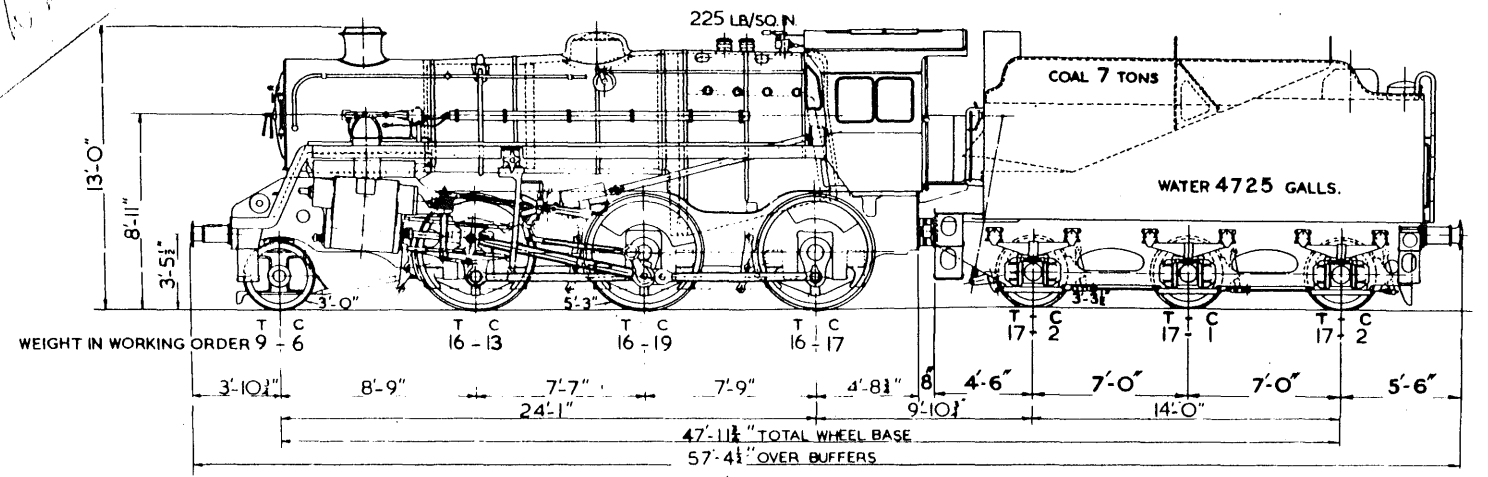

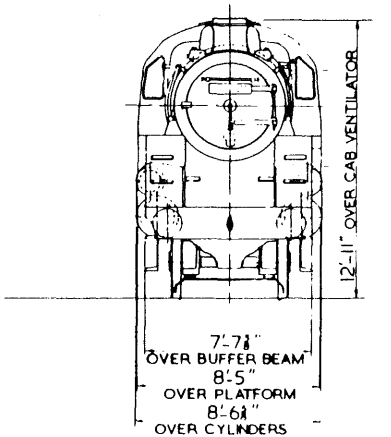

RADIUS OF MINIMUM CURVE 4½ CHAINS WITH APPROPRIATE GAUGE WIDENING

BOILER BARREL DIAMETER (OUTSIDE)	4'-9½" INCREASING TO 5'-3"	CYLINDERS (TWO)	17½" x 26"
FIREBOX (OUTSIDE)	7'-6" LONG x 4'-0½" WIDE	TRACTIVE EFFORT	24170 LB.
TUBES	24 LARGE 5⅛" O.D x 7 SWG	ADHESION FACTOR	4·68
	156 SMALL 1⅞" O.D x 12 SWG.	BRAKE % ENGINE & TENDER	59·5
SUPERHEATER ELEMENTS	1⅞" O.D x 9 SWG		
LENGTH BETWEEN TUBEPLATES	10'-10½"		
HEATING SURFACES TUBES	1075 SQ FT	BOILER TYPE	BR 7
FIREBOX	131 SQ FT	TENDER TYPE	BR 1 B.
TOTAL EVAPORATIVE	1206 SQ FT		
SUPERHEATER	247 SQ FT		
FREE FLUE AREA	3·8 SQ FT		
GRATE AREA	23 SQ FT		

WEIGHTS	FULL T C Q	EMPTY T C Q
ENGINE	59 - 15 - 0	55 - 18 - 2
TENDER	51 - 5 - 0	23 - 3 - 0
TOTAL	111 - 0 - 0	79 - 1 - 2

SCALE
0 1 2 3 4 5 6 7 8 9 10 FEET

STANDARD CLASS 4 2-6-0 ENGINE

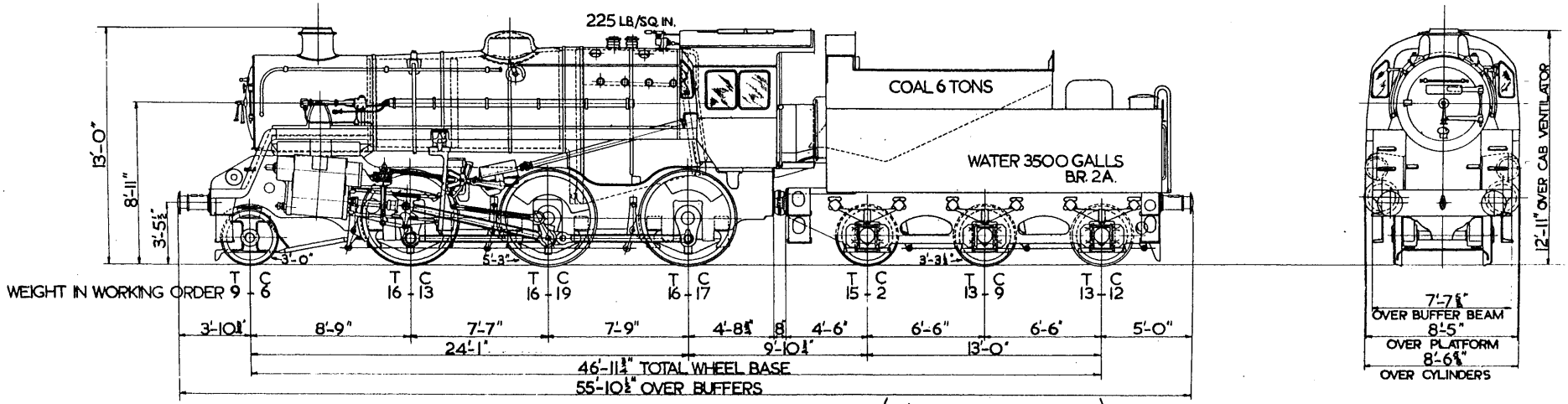

RADIUS OF MINIMUM CURVE. 6 CHAINS WITHOUT GAUGE WIDENING (4½ CHAINS DEAD SLOW)

BOILER BARREL DIAMETER (OUTSIDE)	4'-9⅛" INCREASING TO 5'-3"
FIREBOX (OUTSIDE)	7'-6" LONG × 4'-0⅛" WIDE
TUBES	24 LARGE, 5⅛" O.D. × 7 S.W.G.
	156 SMALL, 1⅞" O.D. × 12 S.W.G.
SUPERHEATER ELEMENTS	1⅞" O.D. × 9 S.W.G.
LENGTH BETWEEN TUBEPLATES	10'-10½"
HEATING SURFACES TUBES	1,075 SQ. FT.
FIREBOX	131 SQ. FT.
TOTAL EVAPORATIVE	1,206 SQ. FT.
SUPERHEATER	247 SQ. FT.
FREE FLUE AREA	3·8 SQ. FT.
GRATE AREA	23 SQ. FT.

CYLINDERS (TWO)	17½" × 26"
TRACTIVE EFFORT	24,170 LB
ADHESION FACTOR	4·68
BRAKE % ENGINE & TENDER	63·75
BOILER TYPE	B.R. 7
TENDER TYPE	B.R. 2A

WEIGHTS	FULL T C Q	EMPTY T C Q
ENGINE	59 - 15 - 0	55 - 18 - 2
TENDER	42 - 3 - 0	20 - 10 - 2
TOTAL	101 - 18 - 0	76 - 9 - 0

SCALE
0 1 2 3 4 5 6 7 8 9 10 FEET

STANDARD CLASS 4. 2-6-0 ENGINE

SL/4LT/1

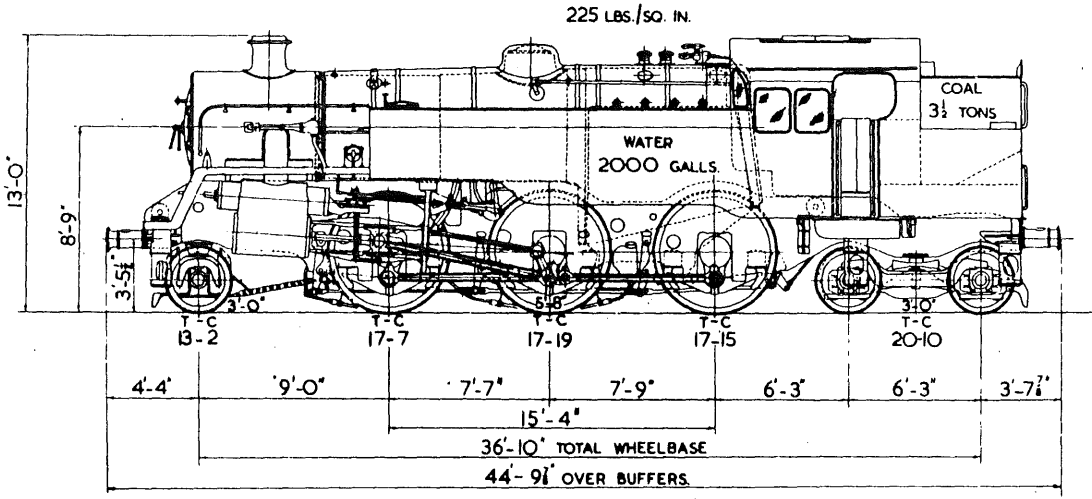

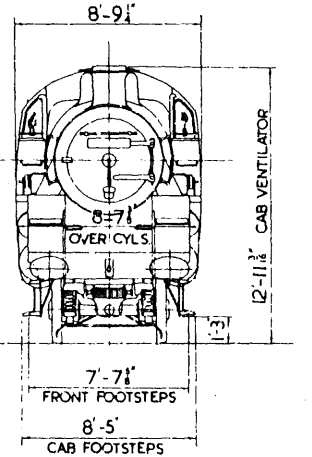

BOILER BARREL DIAMETER (OUTSIDE)	4'-9" INCREASING TO 5'-3"
FIREBOX (OUTSIDE)	8'-6" LONG × 4'-0½" WIDE
TUBES	21 LARGE 5½" O.D. × 7 SWG
	157 SMALL 1⅝" O.D. × 12 SWG
SUPERHEATER ELEMENTS	1⅛" O.D. × 10 SWG
LENGTH BETWEEN TUBEPLATES	12'-3"
HEATING SURFACES : TUBES	1223 SQ. FT.
FIREBOX	143 SQ. FT.
TOTAL EVAPORATIVE	1366 SQ. FT.
SUPERHEATER	240, ~~246~~ SQ. FT.
FREE FLUE AREA	3·78 SQ. FT.
GRATE AREA.	26·7 SQ. FT.

CYLINDERS (TWO)	18" × 28"
TRACTIVE EFFORT	25,515 LBS.
ADHESION FACTOR	4·65
BRAKE %	44·2
MINIMUM RADIUS CURVE (WITH SPECIFIED GAUGE WIDENING)	6 ~~5½~~ CHAINS.
BOILER TYPE	BR5

WEIGHTS	FULL	EMPTY
	T - C	T - C
	86 - 13	69 - 8

SCALE
0 2 4 6 8 10 FEET

B.R. STANDARD CLASS 4. 2-6-4 TANK ENGINE

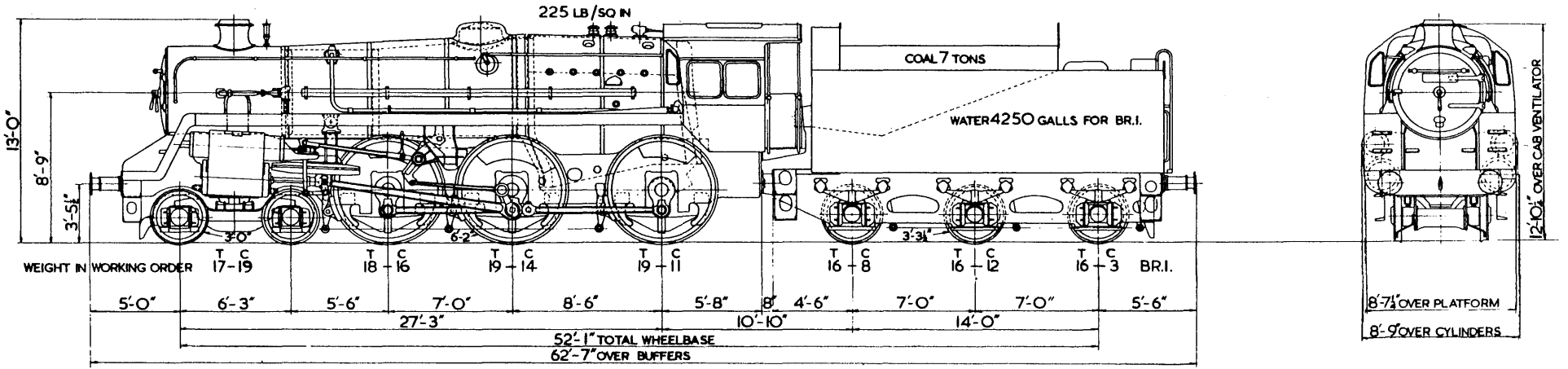

MINIMUM RADIUS CURVE WITHOUT GAUGE WIDENING 6 CHAINS (4½ CHAINS DEAD SLOW).

BOILER BARREL DIAMETER (OUTSIDE)	4'-11⅛" INCREASING TO 5'-8½"
FIREBOX (OUTSIDE)	9'-2⅝" LONG x 3'-1⅛" WIDE
TUBES	28 LARGE 5¼" O.D. x 7 SWG
	151 SMALL 1⅞" O.D. x 11 SWG
SUPERHEATER ELEMENTS	1⅛" O.D. x 9 SWG
LENGTH BETWEEN TUBEPLATES	13'-2⅛"
HEATING SURFACES TUBES	1479 SQ. FT.
FIREBOX	171 SQ. FT.
TOTAL EVAPORATIVE	1650 SQ. FT.
SUPERHEATER	358 SQ. FT.
FREE FLUE AREA	4.5 SQ. FT.
GRATE AREA	28.7 SQ. FT.

CYLINDERS (TWO)	19" x 28"
TRACTIVE EFFORT	26120 LB
ADHESION FACTOR	4.97
BRAKE % ENGINE & TENDER	60.7 BR.I. TENDER
BOILER TYPE	BR. 3.
TENDER TYPE	BR. I.

WITH BR.I. TENDER

WEIGHTS	FULL T—C	EMPTY T—C
ENGINE	76—0	69—5
TENDER	49—3	23—3
TOTAL	125—3	92—8

SCALE
0 2 4 6 8 10 FEET

STANDARD CLASS 5, 4-6-0 ENGINE

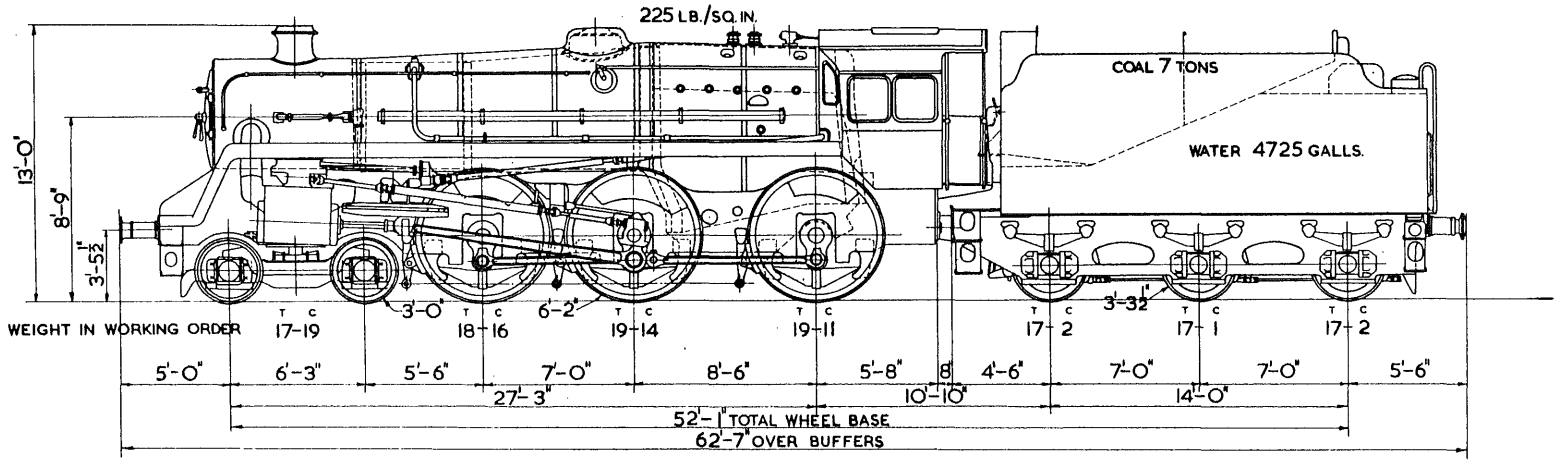

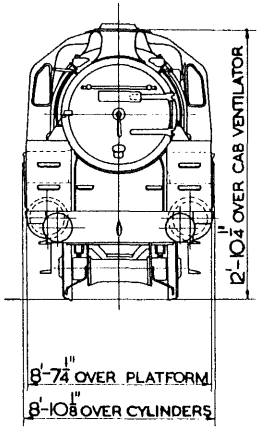

MINIMUM RADIUS CURVE WITHOUT GAUGE WIDENING 6 CHAINS (4½ CHAINS DEAD SLOW).

BOILER	BARREL DIAMETER (OUTSIDE)	4-11 11/16" INCREASING TO 5'-8½"
	FIREBOX (OUTSIDE)	9'-2 13/16" LONG x 3'-11 7/8" WIDE
	TUBES	28 LARGE 5 1/8" O.D. x 7 S.W.G.
		151 SMALL 1 7/8" O.D. x 11 S.W.G.
	SUPERHEATER ELEMENTS	1 3/8" O.D. x 9 S.W.G.
	LENGTH BETWEEN TUBEPLATES	13'-2 7/8"
HEATING SURFACES:	TUBES	1479 SQ. FT.
	FIREBOX	171 SQ. FT.
	TOTAL EVAPORATIVE	1650 SQ. FT.
	SUPERHEATER	358 SQ. FT.
FREE FLUE AREA		4·5 SQ. FT.
GRATE AREA		28·7 SQ. FT.

CYLINDERS (TWO)	19" x 28"
TRACTIVE EFFORT	26 120 LBS.
ADHESION FACTOR	4·97
BRAKE % ENGINE & TENDER	62·3
BOILER TYPE	B.R. 3.
TENDER TYPE	B.R. 1B.

WEIGHTS	FULL T. C.	EMPTY T. C.
ENGINE	76-0	69-5
TENDER	51-5	23-3
TOTAL	127-5	92-8

SCALE
0 2 4 6 8 10 FEET.

B.R. STANDARD CLASS 5. 4-6-0 ENGINE.

BRITISH-CAPROTTI VALVE GEAR.

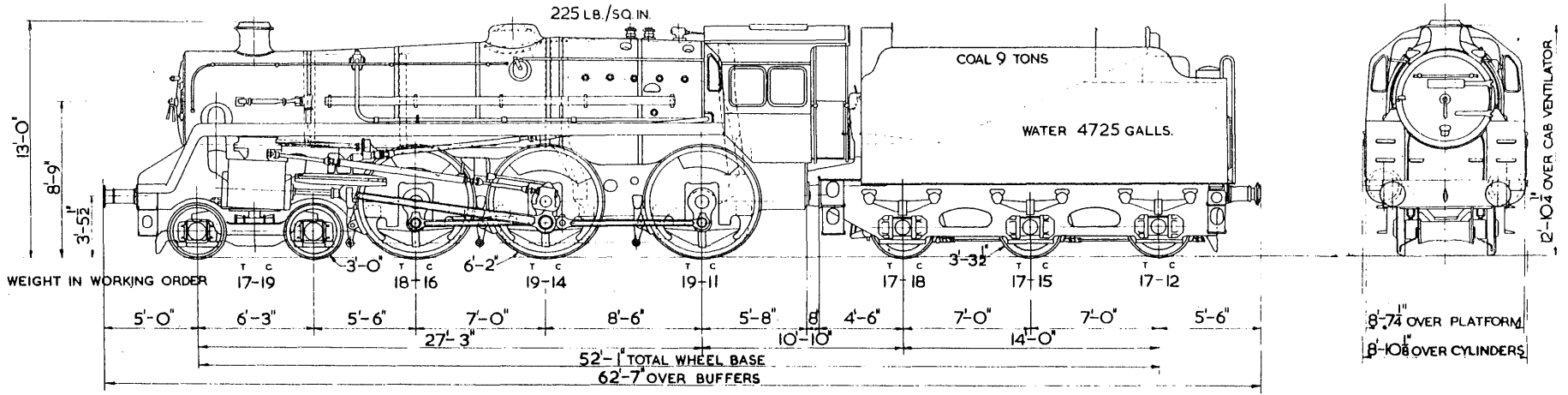

MINIMUM RADIUS CURVE WITHOUT GAUGE WIDENING 6 CHAINS (4½ CHAINS DEAD SLOW)

BOILER BARREL DIAMETER (OUTSIDE)		4-11/16" INCREASING TO 5'-8½"
FIREBOX (OUTSIDE)		9'-2 13/16" LONG x 3'-11 7/8" WIDE
TUBES		28 LARGE 5⅛" O.D. x 7 S.W.G.
		151 SMALL 1⅞" O.D. x 11 S.W.G.
SUPERHEATER ELEMENTS		1⅜" O.D. x 9 S.W.G.
LENGTH BETWEEN TUBEPLATES		13'-2 7/8"
HEATING SURFACES: TUBES		1479 SQ. FT.
FIREBOX		171 SQ. FT.
TOTAL EVAPORATIVE		1650 SQ. FT.
SUPERHEATER		358 SQ. FT.
FREE FLUE AREA		4·5 SQ. FT.
GRATE AREA		28·7 SQ. FT.

CYLINDERS (TWO)	19" x 28"
TRACTIVE EFFORT	26 120 LBS.
ADHESION FACTOR	4·97
BRAKE % ENGINE & TENDER	61·5
BOILER TYPE	B.R. 3.
TENDER TYPE	B.R. 1 C.

WEIGHTS	FULL	EMPTY
	T. C.	T. C.
ENGINE	76-0	69-5
TENDER	53-5	23-3
TOTAL	129-5	92-8

SCALE
0 2 4 6 8 10 FEET

B.R. STANDARD CLASS 5. 4-6-0 ENGINE.

BRITISH-CAPROTTI VALVE GEAR

SL/5B/4

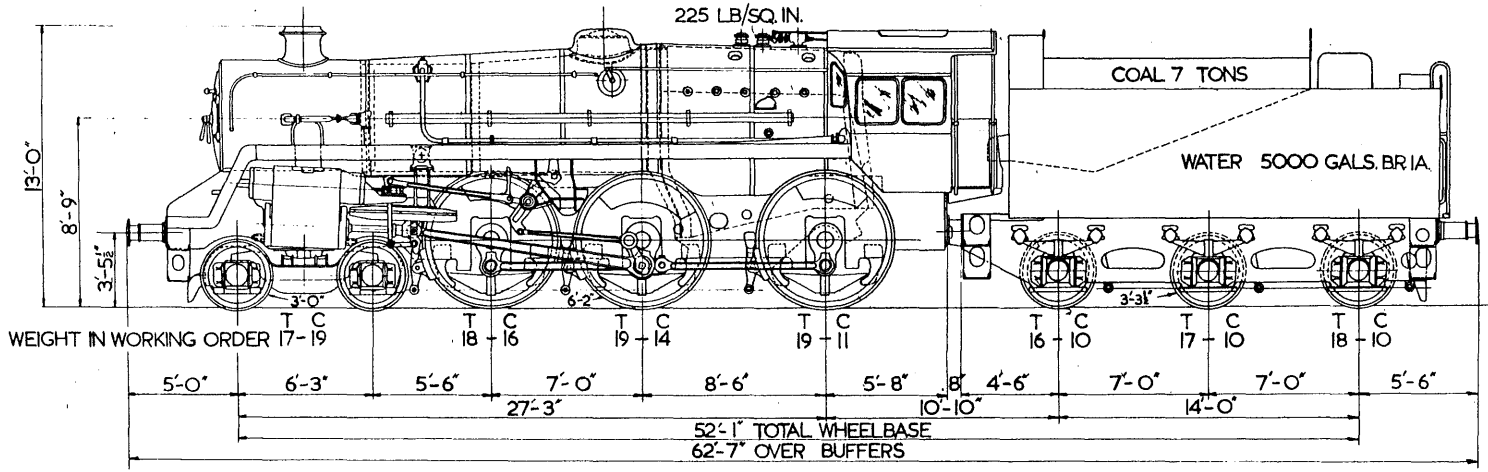

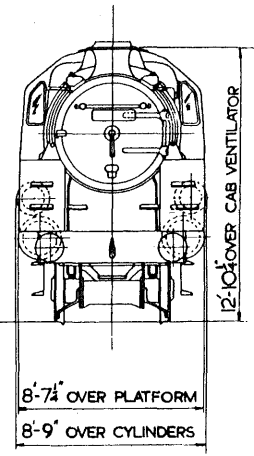

MINIMUM RADIUS CURVE WITHOUT GAUGE WIDENING 6 CHAINS (4½ CHAINS DEAD SLOW)

BOILER BARREL DIAMETER (OUTSIDE)	4'-11 15/16" INCREASING TO 5'-8½"
FIREBOX (OUTSIDE)	9'-2 15/16" LONG, 3'-1 7/8" WIDE.
TUBES	28 LARGE 5 1/8" O.D. x 7 S.W.G.
	151 SMALL 1 7/8" O.D. x 11 S.W.G.
SUPERHEATER ELEMENTS	1 5/8" O.D. x 9 S.W.G.
LENGTH BETWEEN TUBEPLATES	13'-2 7/8"
HEATING SURFACES TUBES	1479 SQ. FT.
FIREBOX	171 SQ. FT.
TOTAL EVAPORATIVE	1650 SQ. FT.
SUPERHEATER	358 SQ. FT.
FREE FLUE AREA	4·5 SQ. FT.
GRATE AREA	28·7 SQ. FT.

CYLINDERS (TWO)	19" x 28"
TRACTIVE EFFORT	26,120 LB
ADHESION FACTOR	4·97
BRAKE % ENGINE & TENDER	59·5
BOILER TYPE	B.R. 3
TENDER TYPE	B.R. IA.

WEIGHTS	FULL T C	EMPTY T C
ENGINE	76 - 0	69 - 5
TENDER	52-10	23 - 3
TOTAL	128-10	92 - 8

SCALE
0 2 4 6 8 10 FEET

STANDARD CLASS 5 4-6-0 ENGINE

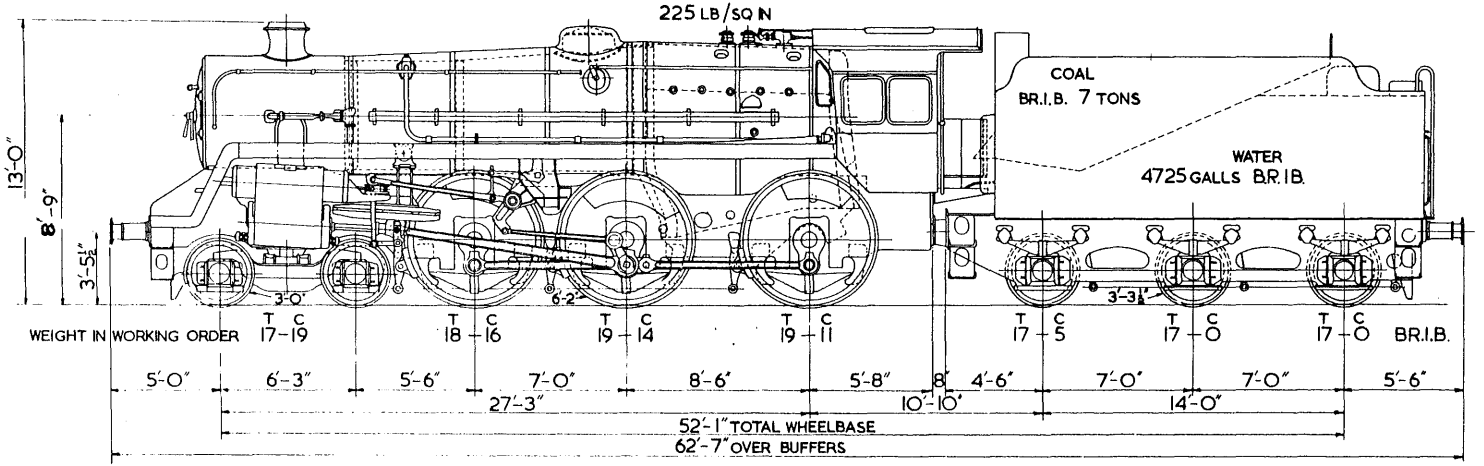

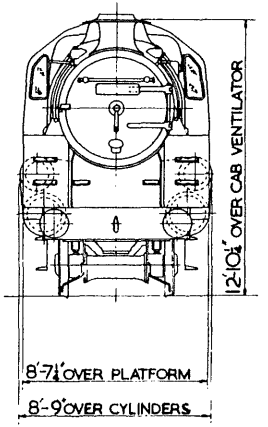

RADIUS OF MINIMUM CURVE WITHOUT GAUGE WIDENING 6 CHAINS. (4½ CHAINS DEAD SLOW)

BOILER BARREL DIAMETER (OUTSIDE)	4'-11⅝" INCREASING TO 5'-8⅛"	CYLINDERS (TWO)	19" x 28"
FIREBOX (OUTSIDE)	9'-2⅝" LONG x 3'-11⅞" WIDE	TRACTIVE EFFORT	26120 LB
TUBES	28 LARGE 5⅛" O.D. x 7 SWG	ADHESION FACTOR	4·97
	151 SMALL 1⅞" O.D. x 11 SWG	BRAKE % ENGINE & TENDER	58·43
SUPERHEATER ELEMENTS	1⅞" O.D. x 9 SWG		
LENGTH BETWEEN TUBEPLATES	13'-2⅞"		
HEATING SURFACES TUBES	1479 SQ FT	BOILER TYPE	BR. 3.
FIREBOX	171 SQ FT	TENDER TYPE	BR.I.B.
TOTAL EVAPORATIVE	1650 SQ FT		
SUPERHEATER	358 SQ FT		
FREE FLUE AREA	4·5 SQ FT		
GRATE AREA	28·7 SQ FT		

WITH BR.I.B. TENDER.

WEIGHTS	FULL T C	EMPTY T C
ENGINE	76 – 0	69 – 5
TENDER	51 – 5	23 – 3
TOTAL	127 – 5	92 – 8

SCALE
0 2 4 6 8 10 FEET

STANDARD CLASS 5. 4-6-0 ENGINE.

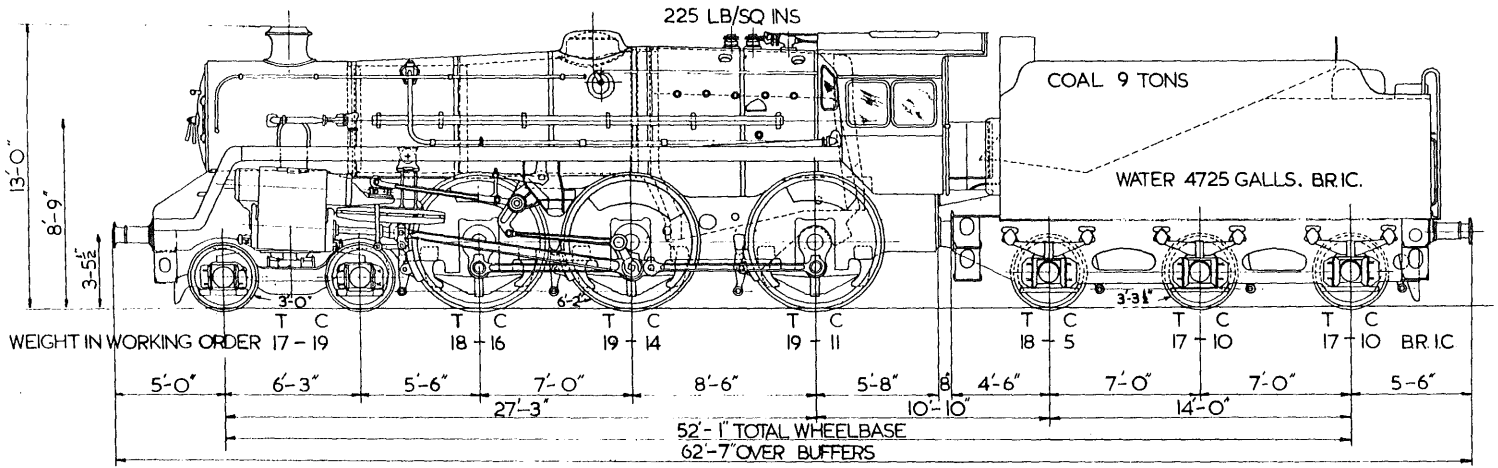

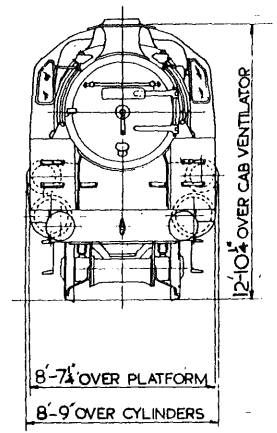

RADIUS OF MINIMUM CURVE WITHOUT GAUGE WIDENING 6 CHAINS (4½ CHAINS DEAD SLOW)

BOILER BARREL DIAMETER (OUTSIDE)	4'-11 11/16" INCREASING TO 5'-8½"
FIREBOX (OUTSIDE)	9'-2 13/16" LONG × 3'-11 7/16" WIDE
TUBES	28 LARGE 5¼" O.D. × 7 S.W.G.
	151 SMALL 1 7/16" O.D × 11 S.W.G.
SUPERHEATER ELEMENTS	1 5/16" O.D. × 9 S.W.G.
LENGTH BETWEEN TUBEPLATES	13'-2 7/16"
HEATING SURFACES TUBES	1479 SQ. FT.
FIREBOX	171 SQ. FT.
TOTAL EVAPORATIVE	1,650 SQ.FT.
SUPERHEATER	358 SQ. FT.
FREE FLUE AREA	4·5 SQ. FT.
GRATE AREA	28·7 SQ. FT.

CYLINDERS (TWO)	19" × 28"
TRACTIVE EFFORT	26,120 LB
ADHESION FACTOR	4·97
BRAKE % ENGINE & TENDER	57·63
BOILER TYPE	BR.3.
TENDER TYPE	BR. IC.

WEIGHTS	FULL T C	EMPTY T C
ENGINE	76 - 0	69 - 5
TENDER	53 - 5	23 - 3
TOTAL	129 - 5	92 - 8

SCALE
0 2 4 6 8 10 FEET

STANDARD CLASS 5 4-6-0 ENGINE

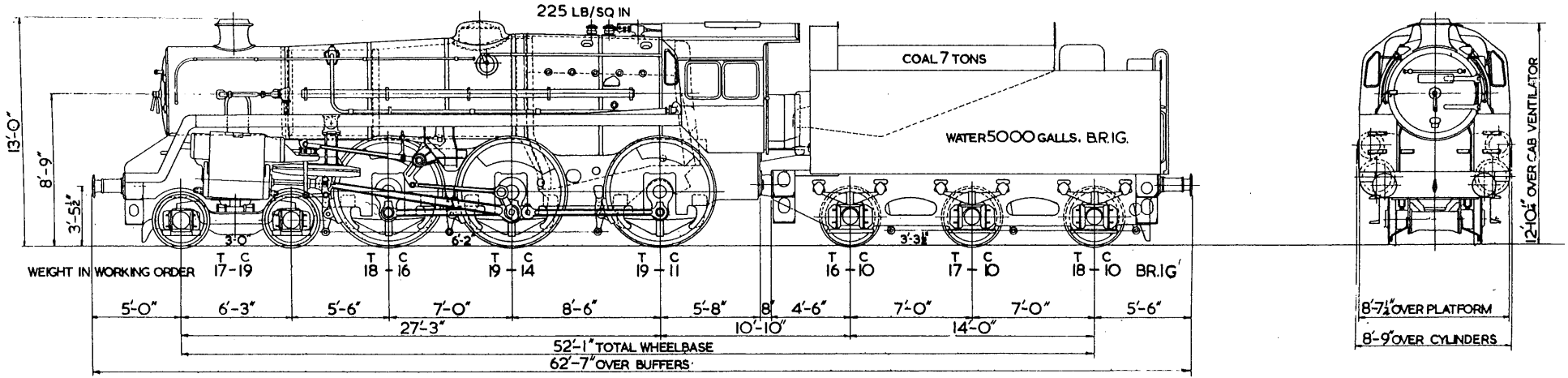

MINIMUM RADIUS CURVE WITHOUT GAUGE WIDENING 6 CHAINS (4½ CHAINS DEAD SLOW)

BOILER BARREL DIAMETER (OUTSIDE)	4'-11⅝" INCREASING TO 5'-8½"
FIREBOX (OUTSIDE)	9'-2⅝" LONG × 3'-1 17/32" WIDE
TUBES	28 LARGE 5½" O.D. × 7 SWG
	151 SMALL 1⅞" O.D. × 11 SWG
SUPERHEATER ELEMENTS	1⅛" O.D. × 9 SWG
LENGTH BETWEEN TUBEPLATES	13'-2⅞"
HEATING SURFACES TUBES	1479 SQ FT
FIREBOX	171 SQ FT
TOTAL EVAPORATIVE	1650 SQ FT
SUPERHEATER	358 SQ FT
FREE FLUE AREA	4.5 SQ. FT
GRATE AREA	28.7 SQ.FT

CYLINDERS (TWO)	19" x 28"
TRACTIVE EFFORT	26120 LB
ADHESION FACTOR	4.97
BRAKE % ENGINE & TENDER	59.5
BOILER TYPE	BR. 3
TENDER TYPE	BR. IG.

WEIGHTS	FULL T C	EMPTY T C
ENGINE	76-0	69-5
TENDER	52-10	23-3
TOTAL	128-10	92-8

SCALE
0 2 4 6 8 10 FEET

STANDARD CLASS 5 4-6-0 ENGINE

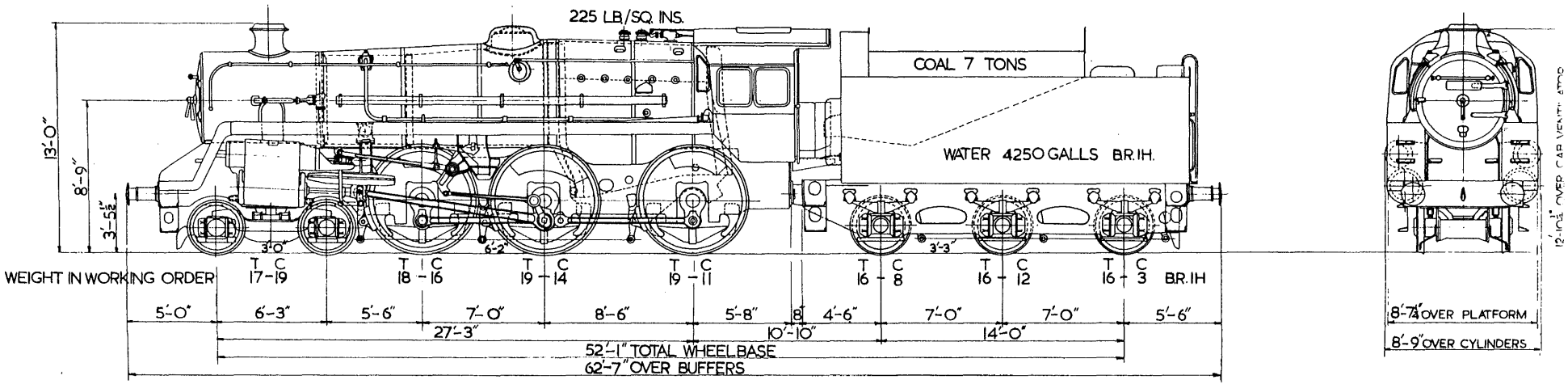

MINIMUM RADIUS CURVE WITHOUT GAUGE WIDENING 6 CHAINS (4½ CHAINS DEAD SLOW)

BOILER BARREL DIAMETER (OUTSIDE)	4'-11 11/16" INCREASING TO 5'-8½"
FIREBOX (OUTSIDE)	9'-2 13/16" LONG × 3'-11 7/16" WIDE
TUBES	28 LARGE 5 1/8" O.D. × 7 S.W.G.
	151 SMALL 1 7/8" O.D. × 11 S.W.G
SUPERHEATER ELEMENTS	1 3/8" O.D. × 9 SWG
LENGTH BETWEEN TUBEPLATES	13'-2 7/16"
HEATING SURFACES TUBES	1,479 SQ. FT.
FIREBOX	171 SQ. FT.
TOTAL EVAPORATIVE	1,650 SQ. FT.
SUPERHEATER	358 SQ. FT.
FREE FLUE AREA	4·5 SQ. FT.
GRATE AREA	28·7 SQ. FT.

CYLINDERS (TWO)	19" × 28"
TRACTIVE EFFORT	26,120 LBS.
ADHESION FACTOR	4·97
BRAKE % ENGINE & TENDER	60·7
BOILER TYPE	BR 3
TENDER TYPE	BR 1H

WEIGHTS	FULL T C	EMPTY T C
ENGINE	76 - 0	69 - 5
TENDER	49 - 3	23 - 3
TOTAL	125 - 3	92 - 8

SCALE
0 2 4 6 8 10 FEET

STANDARD CLASS 5 4-6-0 ENGINE

SL/6A/1

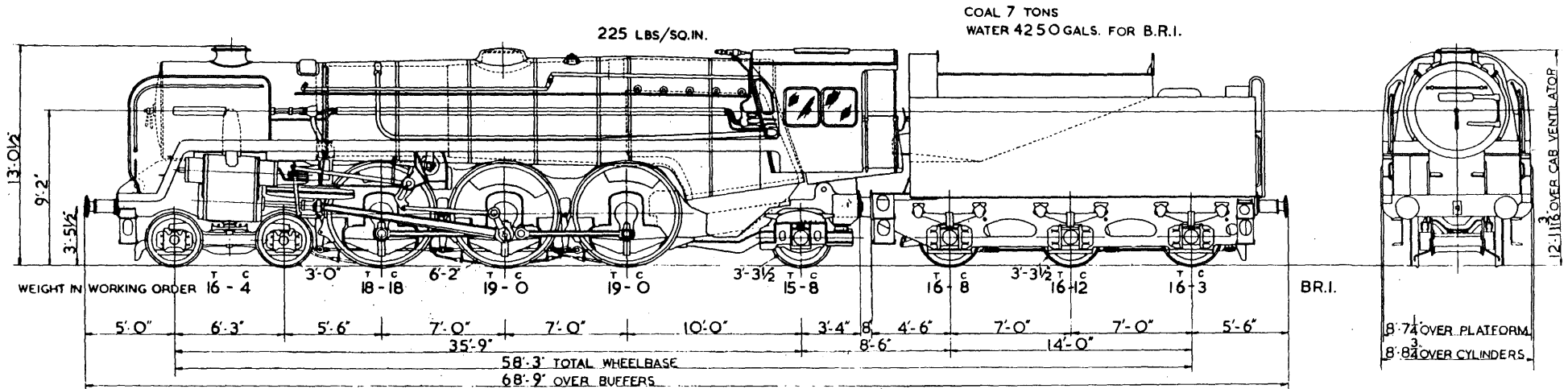

MINIMUM RADIUS CURVE WITHOUT GAUGE WIDENING 6 CHAINS (4½ CHAINS DEAD SLOW).

BOILER BARREL DIAMETER (OUTSIDE)	5'-4" INCREASING TO 6'-1"
FIREBOX (OUTSIDE)	6'-9" LONG x 7'-0" TO 6'-8" WIDE.
TUBES	35 LARGE 5½" O.D. x 7 S.W.G.
	108 SMALL 2⅛" O.D. x 11 S.W.G.
SUPERHEATER ELEMENTS	1⅜" O.D. x 9 S.W.G.
LENGTH BETWEEN TUBEPLATES	17'-0"
HEATING SURFACES : TUBES	1,878 SQ.FT.
FIREBOX	195 SQ.FT.
TOTAL EVAPORATIVE	2,073 SQ.FT.
SUPERHEATER	592, ~~604~~ SQ.FT.
FREE FLUE AREA	5·73 SQ.FT.
GRATE AREA	36 SQ.FT.

CYLINDERS (TWO)	19½" x 28"
TRACTIVE EFFORT	27,520 LBS
ADHESION FACTOR	4·63
BRAKE % ENGINE & TENDER	49·9 BR.I. TENDER. 49·0 BR.I.A. TENDER.
BOILER TYPE	BR.2.
TENDER TYPE	BR.I.

WITH BR I. TENDER.

WEIGHTS.	FULL T-C	EMPTY T-C
ENGINE	88-10	80-18
TENDER	49-3	23-3
TOTAL	137-13	104-1

SCALE
0 2 4 6 8 10 FEET

STANDARD CLASS 6. 4-6-2 ENGINE.

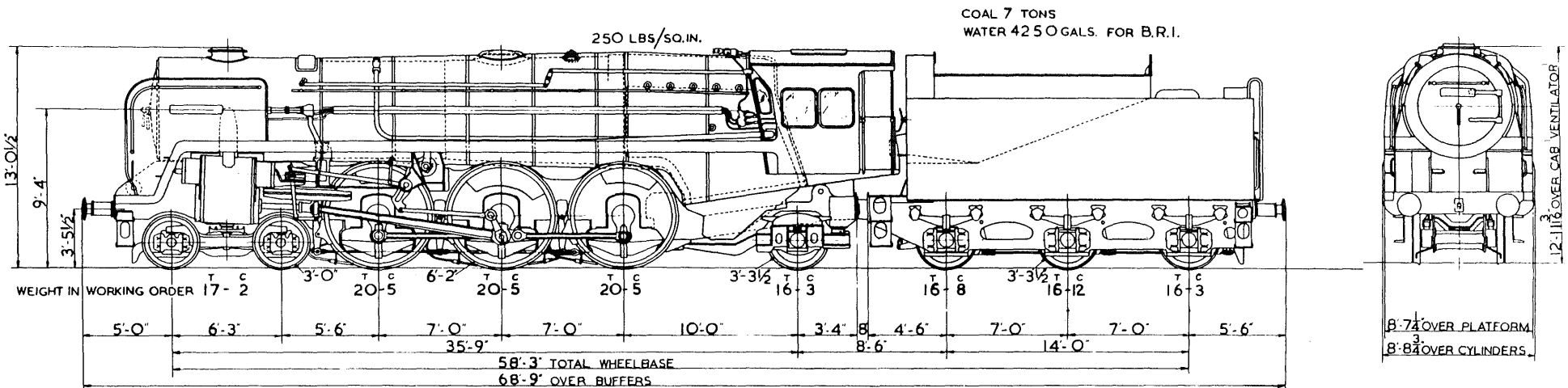

MINIMUM RADIUS CURVE WITHOUT GAUGE WIDENING 6 CHAINS (4½ CHAINS DEAD SLOW).

BOILER BARREL DIAMETER (OUTSIDE)	5'-9" INCREASING TO 6'-5½"	CYLINDERS (TWO)	20" x 28"
FIREBOX (OUTSIDE)	7'-0" LONG x 7'-9" TO 7'-4" WIDE	TRACTIVE EFFORT	32,150 LBS
TUBES	40 LARGE 5½" O.D. x 7 SWG 136 SMALL 2⅛" O.D. x 11 SWG	ADHESION FACTOR	4·23
SUPERHEATER ELEMENTS	1⅜" O.D. x 9 SWG	BRAKE % ENGINE & TENDER	53·4 BR.I. TENDER.
LENGTH BETWEEN TUBEPLATES	17'-0"		
HEATING SURFACES : TUBES	2264 SQ. FT.	BOILER TYPE	BR. I.
FIREBOX	210 SQ. FT.	TENDER TYPE	BR. I
TOTAL EVAPORATIVE	2474 SQ. FT.		
SUPERHEATER	677 SQ. FT.		
FREE FLUE AREA	6·8 SQ.FT.		
GRATE AREA	42 SQ.FT.		

WITH B.R.I. TENDER.

WEIGHTS	FULL T-C	EMPTY T-C
ENGINE	94-0	85-3
TENDER	49-3	23-3
TOTAL	143-3	108-6

SCALE
0 2 4 6 8 10 FEET

STANDARD CLASS 7. 4-6-2 ENGINE.

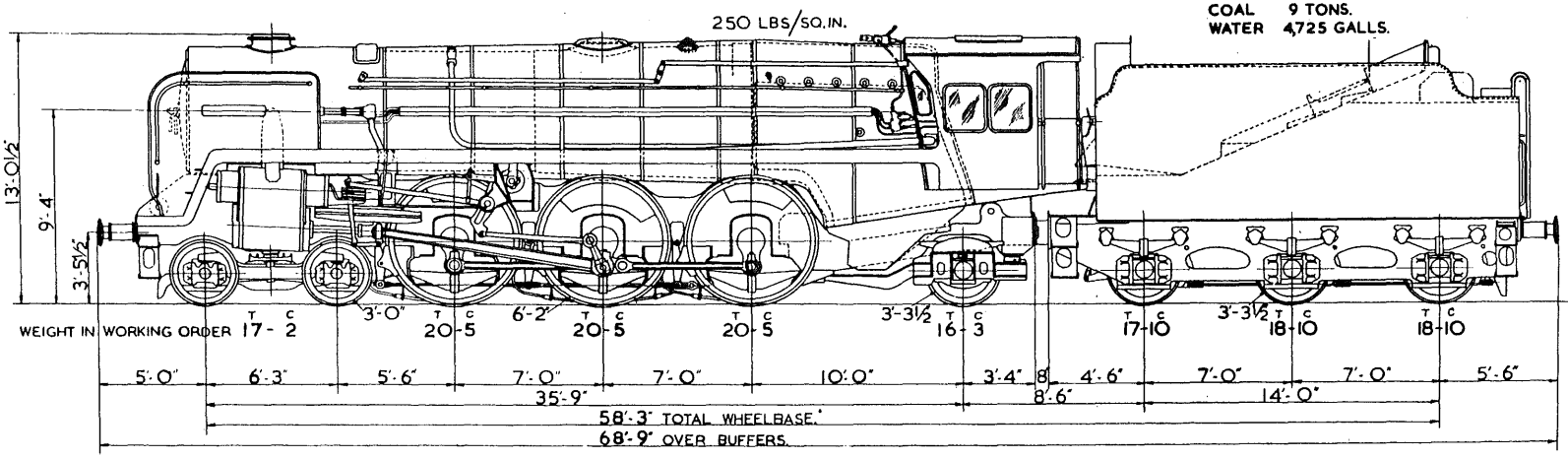

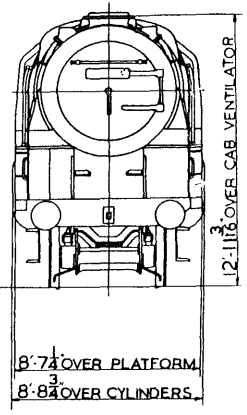

MINIMUM RADIUS CURVE WITHOUT GAUGE WIDENING 6 CHAINS (4½ CHAINS DEAD SLOW.)

BOILER BARREL DIAMETER (OUTSIDE)	5'-9" INCREASING TO 6'-5½"
FIREBOX (OUTSIDE)	7'-0" LONG x 7'-9" TO 7'-4" WIDE
TUBES	40 LARGE 5½" O.D. x 7 S.W.G.
	136 SMALL 2⅛" O.D. x 11 S.W.G.
SUPERHEATER ELEMENTS	1⅜" O.D. x 9 S.W.G.
LENGTH BETWEEN TUBEPLATES	17'-0"
HEATING SURFACES: TUBES	2264 SQ. FT.
FIREBOX	210 SQ. FT.
TOTAL EVAPORATIVE	2474 SQ. FT.
SUPERHEATER	677 SQ. FT.
FREE FLUE AREA	6·8 SQ. FT.
GRATE AREA.	42 SQ. FT.

CYLINDERS – TWO	20" x 28"
TRACTIVE EFFORT	32,150 LBS
ADHESION FACTOR	4·23
BRAKE % ENGINE & TENDER	51·7
BOILER TYPE	BR 1
TENDER TYPE	BR 1 D

only fitted to the last 10 locos ie 70045 to 54 incl. pre B'ham LDO.

WEIGHTS	FULL T. C.	EMPTY T. C.
ENGINE	94-0	85-3
TENDER	54-10	24-8
TOTAL	148-10	109-11

SCALE
0 2 4 6 8 10 FEET

STANDARD CLASS 7. 4-6-2 ENGINE.

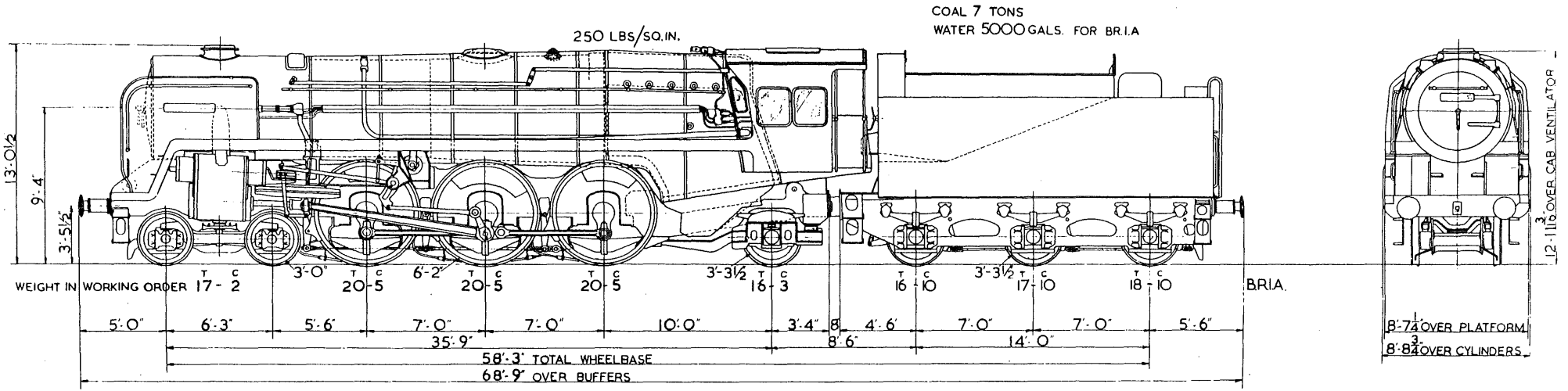

MINIMUM RADIUS CURVE WITHOUT GAUGE WIDENING 6 CHAINS (4½ CHAINS DEAD SLOW.)

BOILER BARREL DIAMETER (OUTSIDE)	5'-9" INCREASING TO 6'-5½"
FIREBOX (OUTSIDE)	7'-0" LONG x 7'-9" TO 7'-4" WIDE
TUBES	40 LARGE 5½" O.D. x 7 SWG
	136 SMALL 2⅛" O.D. x 11 SWG
SUPERHEATER ELEMENTS	1⅜" O.D. x 9 S.W.G.
LENGTH BETWEEN TUBEPLATES	17'-0"
HEATING SURFACES : TUBES	2264 SQ. FT.
FIREBOX	210 SQ. FT.
TOTAL EVAPORATIVE	2474 SQ. FT.
SUPERHEATER	677 SQ. FT.
FREE FLUE. AREA	6·8 SQ. FT.
GRATE AREA	42 SQ. FT.

CYLINDERS – TWO	20" x 28"
TRACTIVE EFFORT	32,150 LBS
ADHESION FACTOR	4·23
BRAKE % ENGINE & TENDER	53·4 BR.I.A. TENDER.
BOILER TYPE	BR 1
TENDER TYPE	BR 1 A

WITH B.R.I.A. TENDER

WEIGHTS	FULL	EMPTY
ENGINE	94 - 0	85 - 3
TENDER	52 - 10	23 - 3
TOTAL	146 - 10	108 - 6

SCALE
0 2 4 6 8 10 FEET

STANDARD CLASS 7. 4-6-2 ENGINE.

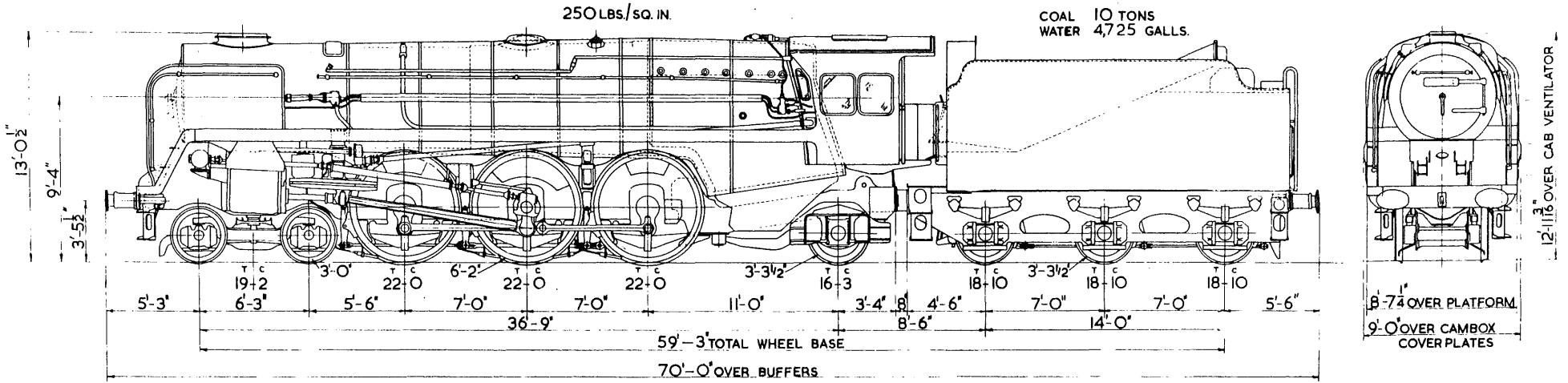

BOILER BARREL DIAMETER (OUTSIDE)		5'-9" INCREASING TO 6'-5½"
FIREBOX (OUTSIDE)		8'-0⅛" LONG x 7'-9" TO 7'-4" WIDE
TUBES		40 LARGE 5½" O.D. x 7 S.W.G.
		136 SMALL 2⅛" O.D. x 11 S.W.G.
SUPERHEATER ELEMENTS		1⅜" O.D. x 9 S.W.G.
LENGTH BETWEEN TUBEPLATES		17'-0"
HEATING SURFACES:	TUBES	2264 SQ. FT.
	FIREBOX	226 SQ. FT.
	TOTAL EVAPORATIVE	2490 SQ. FT.
	SUPERHEATER	691 SQ. FT.
FREE FLUE AREA		6·8 SQ. FT.
GRATE AREA		48·6 SQ. FT.

CYLINDERS (THREE)	18" x 28"
TRACTIVE EFFORT	39,080 LBS.
ADHESION FACTOR	3·78
BRAKE % ENGINE & TENDER	51·17
MINIMUM RADIUS CURVE (WITH SPECIFIED GAUGE WIDENING)	42 CHAINS
BOILER TYPE	B.R. 13
TENDER TYPE	B.R. I.E.

WEIGHTS	FULL T. C.	EMPTY T. C.
ENGINE	101-5	92-0
TENDER	55-10	24-8
TOTAL	156-15	116-8

SCALE
0 2 4 6 8 10

STANDARD CLASS 8. 4-6-2 ENGINE.

BRITISH-CAPROTTI VALVE GEAR.

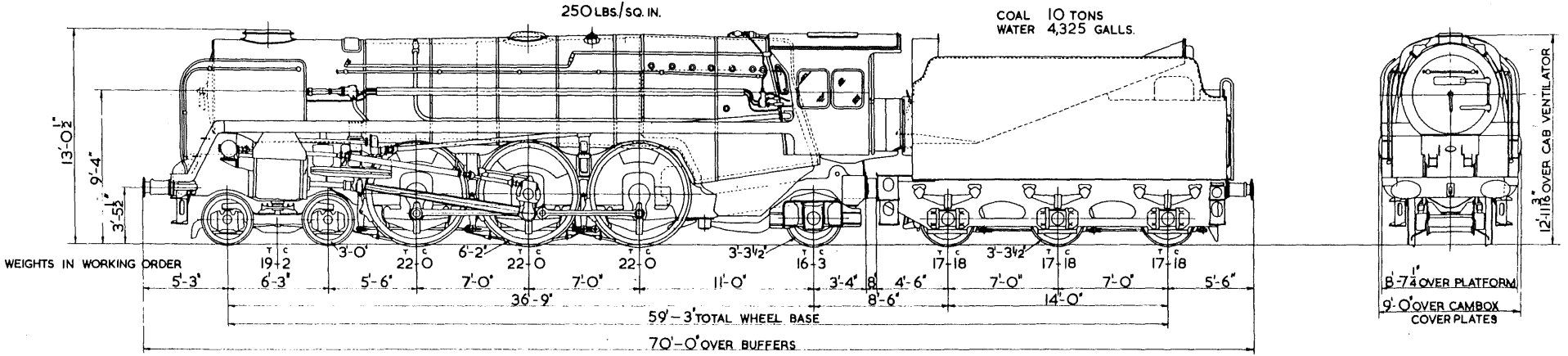

MINIMUM RADIUS CURVE WITHOUT GAUGE WIDENING 6 CHAINS (4½ CHAINS DEAD SLOW)

BOILER BARREL DIAMETER (OUTSIDE)	5'-9" INCREASING TO 6'-5½"
FIREBOX (OUTSIDE)	8'-0⅛" LONG x 7'-9" TO 7'-4" WIDE
TUBES	40 LARGE 5½" O.D. x 7 S.W.G.
	136 SMALL 2⅛" O.D. x 11 S.W.G.
SUPERHEATER ELEMENTS	1⅜" O.D. x 9 S.W.G.
LENGTH BETWEEN TUBEPLATES	17'-0"
HEATING SURFACES: TUBES	2264 SQ. FT.
FIREBOX	226 SQ. FT.
TOTAL EVAPORATIVE	2490 SQ. FT.
SUPERHEATER	677 SQ. FT.
FREE FLUE AREA	6·8 SQ. FT.
GRATE AREA	48·6 SQ. FT.

CYLINDERS (THREE)	18" x 28"
TRACTIVE EFFORT	39,080 LBS.
ADHESION FACTOR	3·78
BRAKE % ENGINE & TENDER	51·17
BOILER TYPE	B.R. 13
TENDER TYPE	B.R. I.J.

WEIGHTS	FULL T. C.	EMPTY T. C.
ENGINE	101-5	92-0
TENDER	53-14	24-8
TOTAL	154-19	116-8

SCALE
0 2 4 6 8 10

STANDARD CLASS 8, 4-6-2 ENGINE.

BRITISH-CAPROTTI VALVE GEAR.

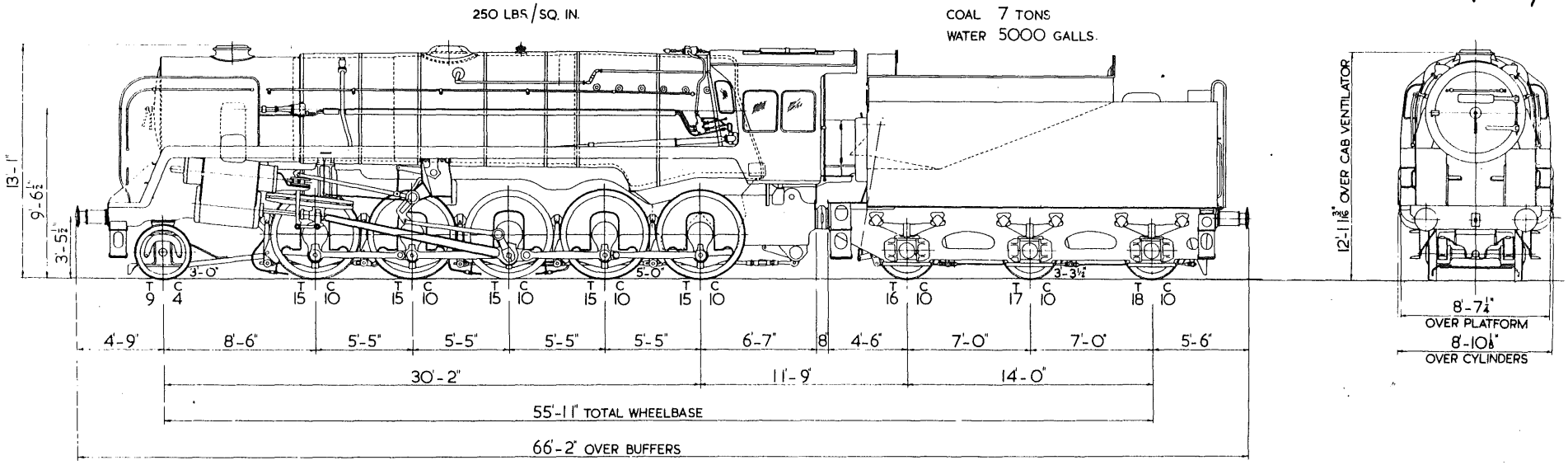

BOILER BARREL DIAMETER (OUTSIDE)	5'-9" INCREASING TO 6'-1"
FIREBOX (OUTSIDE)	7'-5⅞" LONG x 7'-0⅛" TO 6'-6⅞" WIDE
TUBES	35 LARGE 5¼" O.D. x 7 S.W.G.
	138 SMALL 2" O.D. x 11 S.W.G.
SUPERHEATER ELEMENTS	1⅜" O.D. x 9 S.W.G.
LENGTH BETWEEN TUBEPLATES	15'-3"
HEATING SURFACES: TUBES	1836 SQ. FT.
FIREBOX	179 SQ. FT.
TOTAL EVAPORATIVE	2015 SQ. FT.
SUPERHEATER	535 SQ. FT.
FREE FLUE AREA	5·49 SQ. FT.
GRATE AREA	40·2 SQ. FT.

CYLINDERS (TWO)	20" x 28"
TRACTIVE EFFORT	39,667 LBS.
ADHESION FACTOR	4·38
BRAKE % ENGINE & TENDER	69·8
MINIMUM RADIUS CURVE WITHOUT GAUGE WIDENING	6 CHAINS or 4½ chains restricted
BOILER TYPE	B.R. 9
TENDER TYPE	B.R. 1G

WEIGHTS	FULL T	FULL C	EMPTY T	EMPTY C
ENGINE	86	14	78	0
TENDER	52	10	23	3
TOTAL	139	4	101	3

SCALE
0 2 4 6 8 10 FEET

B.R. STANDARD CLASS 9. 2-10-0 ENGINE

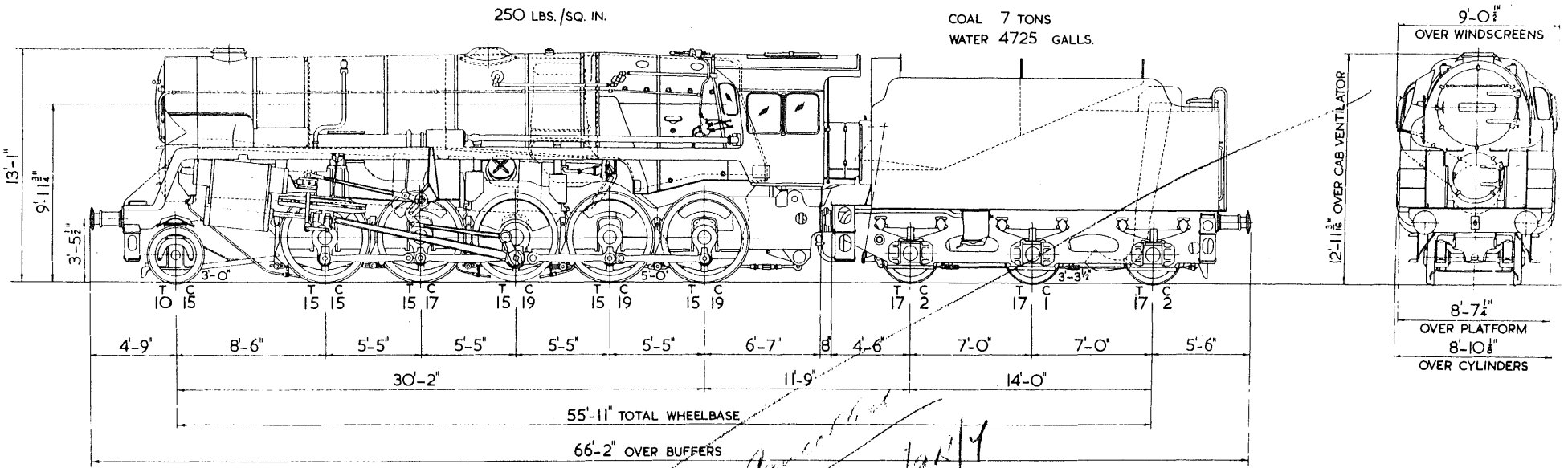

BOILER

BARREL, DIA. (OUTSIDE)	4'-11⅝" INCREASING TO 5'-7½"
FIREBOX (OUTSIDE)	7'-5½" LONG x 7'-0⅛" TO 6'-6¾" WIDE
TUBES	28 LARGE 5½" O.D. x 7 S.W.G.
	60 SMALL 2⅜" O.D. x 11 S.W.G.
SUPERHEATER ELEMENTS	1¼" O.D. x 9 S.W.G.
LENGTH BETWEEN TUBEPLATES	16'-5"

PREHEATER

BARREL DIA. (OUTSIDE)	2'-8⅜"
TUBES	90—2¼" O.D. x 11 S.W.G.
LENGTH BETWEEN TUBEPLATES	19'-3"

HEATING SURFACES

BOILER

TUBES	1274 SQ. FT.
FIREBOX	158 SQ. FT.
TOTAL EVAPORATIVE	1432 SQ. FT.
SUPERHEATER	411 SQ. FT.

PREHEATER

TUBES	1021 SQ. FT.
EXHAUST STEAM JACKET	57 SQ. FT.
FREE FLUE AREA (BOILER)	4·59 SQ. FT.
FREE FLUE AREA (PREHEATER)	2·0 SQ. FT.
GRATE AREA	40·2 SQ. FT.

CYLINDERS (TWO)	20" x 28"
TRACTIVE EFFORT	39,667 LBS.
ADHESION FACTOR	4·48
BRAKE % ENGINE & TENDER	68·4
MINIMUM RADIUS CURVE (WITHOUT GAUGE WIDENING)	6 CHAINS
BOILER TYPE	B.R.12
TENDER TYPE	B.R.1B.

WEIGHTS	FULL T	FULL C	EMPTY T	EMPTY C
ENGINE	90	4	82	2
TENDER	51	5	23	3
TOTAL	141	9	105	5

SCALE
0 2 4 6 8 10 FEET

B.R. CLASS 9 2-10-0 CROSTI ENGINE

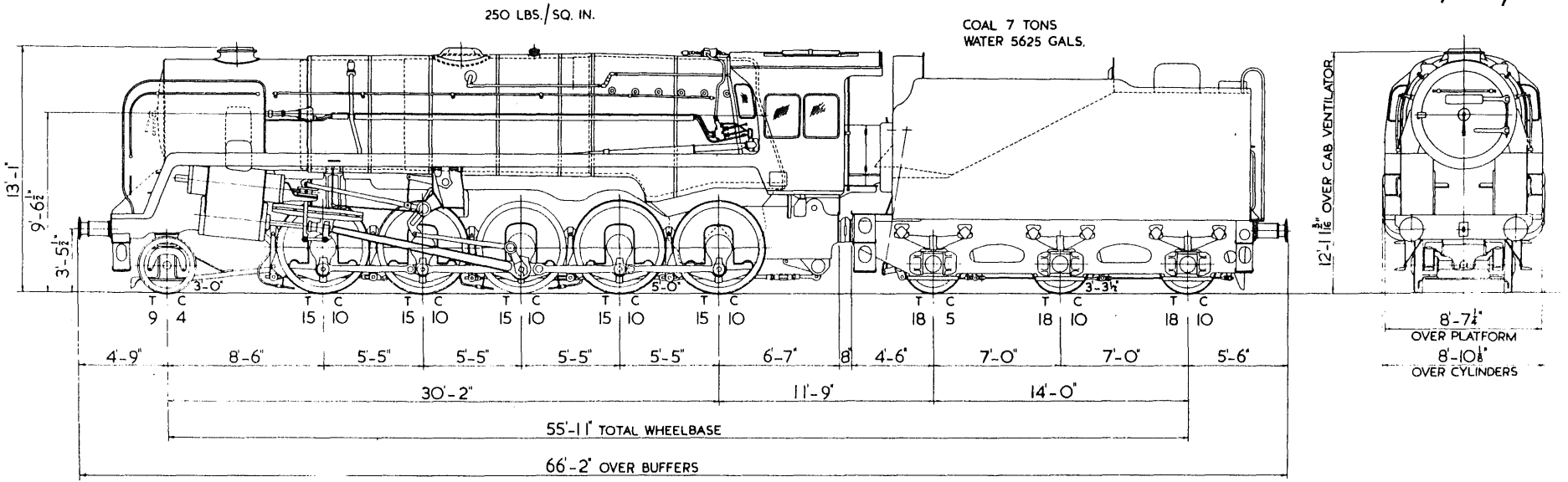

BOILER BARREL DIAMETER (OUTSIDE)	5'-9" INCREASING TO 6'-1"
FIREBOX (OUTSIDE)	7'-5⅛" LONG x 7'-0⅛" TO 6'-6 7/16" WIDE
TUBES	35 LARGE 5¼" O.D. x 7 S.W.G.
	138 SMALL 2" O.D. x 11 S.W.G.
SUPERHEATER ELEMENTS	⅛" O.D. x 9 S.W.G.
LENGTH BETWEEN TUBEPLATES	15'-3"
HEATING SURFACES: TUBES	1836 SQ. FT.
FIREBOX	179 SQ. FT.
TOTAL EVAPORATIVE	2015 SQ. FT.
SUPERHEATER	535 SQ. FT.
FREE FLUE AREA	5·49 SQ. FT.
GRATE AREA	40·2 SQ. FT.

CYLINDERS (TWO)	20" x 28"
TRACTIVE EFFORT	39,667 LBS.
ADHESION FACTOR	4·38
BRAKE % ENGINE & TENDER	68·8
MINIMUM RADIUS CURVE WITHOUT GAUGE WIDENING	6 CHAINS or 4½ chains on down slow.
BOILER TYPE	B.R.9
TENDER TYPE	B.R.1F

WEIGHTS	FULL T	FULL C	EMPTY T	EMPTY C
ENGINE	86	14	78	0
TENDER	55	5	23	3
TOTAL	141	19	101	3

SCALE
0 2 4 6 8 10 FEET

B.R. STANDARD CLASS 9. 2-10-0 ENGINE

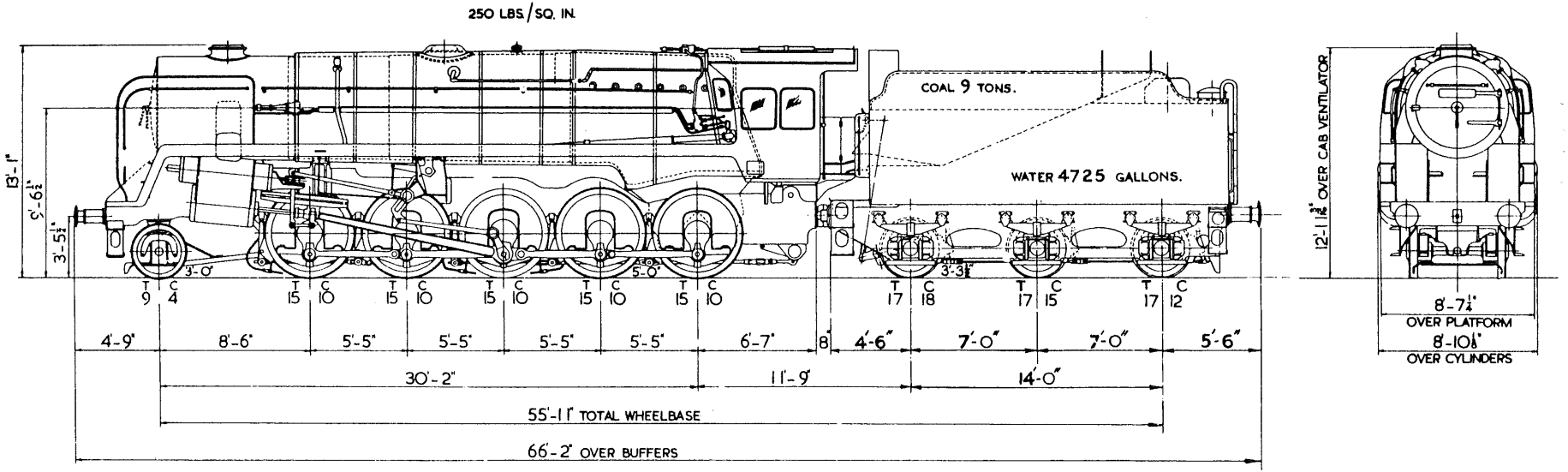

BOILER BARREL DIAMETER (OUTSIDE)	5'-9" INCREASING TO 6'-1"
FIREBOX (OUTSIDE)	7'-5½" LONG x 7'-0⅛" TO 6'-6¾" WIDE
TUBES	35 LARGE 5½" O.D. x 7 S.W.G.
	138 SMALL 2" O.D. x 11 S.W.G.
SUPERHEATER ELEMENTS	1⅛" O.D. x 9 S.W.G.
LENGTH BETWEEN TUBEPLATES	15'-3"
HEATING SURFACES: TUBES	1836 SQ. FT.
FIREBOX	179 SQ. FT.
TOTAL EVAPORATIVE	2015 SQ. FT.
SUPERHEATER	535 SQ. FT.
FREE FLUE AREA	5·49 SQ. FT.
GRATE AREA	40·2 SQ. FT.

CYLINDERS (TWO)	20" x 28"
TRACTIVE EFFORT	39,667 LBS.
ADHESION FACTOR	4·38
BRAKE % ENGINE & TENDER	69·5
MINIMUM RADIUS CURVE WITHOUT GAUGE WIDENING	6 CHAINS or 4½ chains dead slow.
BOILER TYPE	B.R. 9
TENDER TYPE	B.R. IC.

WEIGHTS	FULL T	FULL C	EMPTY T	EMPTY C
ENGINE	86	14	78	0
TENDER	53	5	23	3
TOTAL	139	19	101	3

SCALE
0 2 4 6 8 10 FEET

B.R. STANDARD CLASS 9. 2-10-0 ENGINE

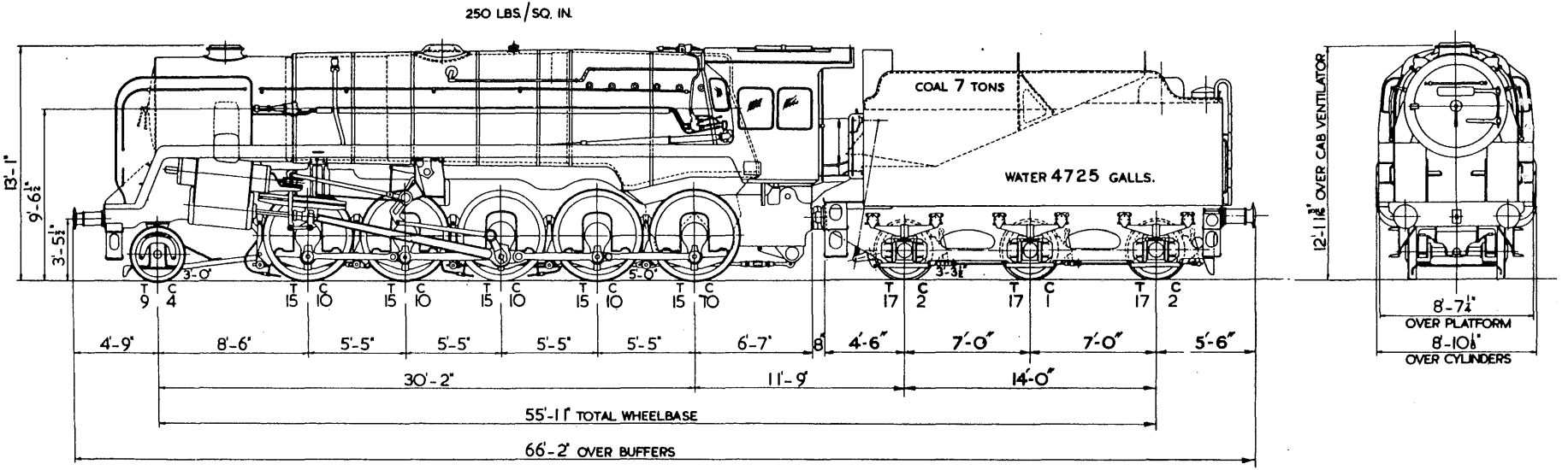

BOILER BARREL DIAMETER (OUTSIDE)	5'-9" INCREASING TO 6'-1"
FIREBOX (OUTSIDE)	7'-5⅛" LONG x 7'-0⅛" TO 6'-6⅞" WIDE
TUBES	35 LARGE 5⅛" O.D. x 7 S.W.G.
	138 SMALL 2" O.D. x 11 S.W.G.
SUPERHEATER ELEMENTS	1⅛" O.D. x 9 S.W.G.
LENGTH BETWEEN TUBEPLATES	15'-3"
HEATING SURFACES: TUBES	1836 SQ. FT.
FIREBOX	179 SQ. FT.
TOTAL EVAPORATIVE	2015 SQ. FT.
SUPERHEATER	535 SQ. FT.
FREE FLUE AREA	5·49 SQ. FT.
GRATE AREA	40·2 SQ. FT.

CYLINDERS (TWO)	20" x 28"
TRACTIVE EFFORT	39,667 LBS.
ADHESION FACTOR	4·38
BRAKE % ENGINE & TENDER	70·25
MINIMUM RADIUS CURVE WITHOUT GAUGE WIDENING	6 CHAINS 4½ D. [illegible]
BOILER TYPE	B.R. 9
TENDER TYPE	B.R. 1B.

WEIGHTS	FULL T	FULL C	EMPTY T	EMPTY C
ENGINE	86	14	78	0
TENDER	51	5	23	3
TOTAL	137	19	101	3

SCALE
0 2 4 6 8 10 FEET

B.R. STANDARD CLASS 9. 2-10-0 ENGINE

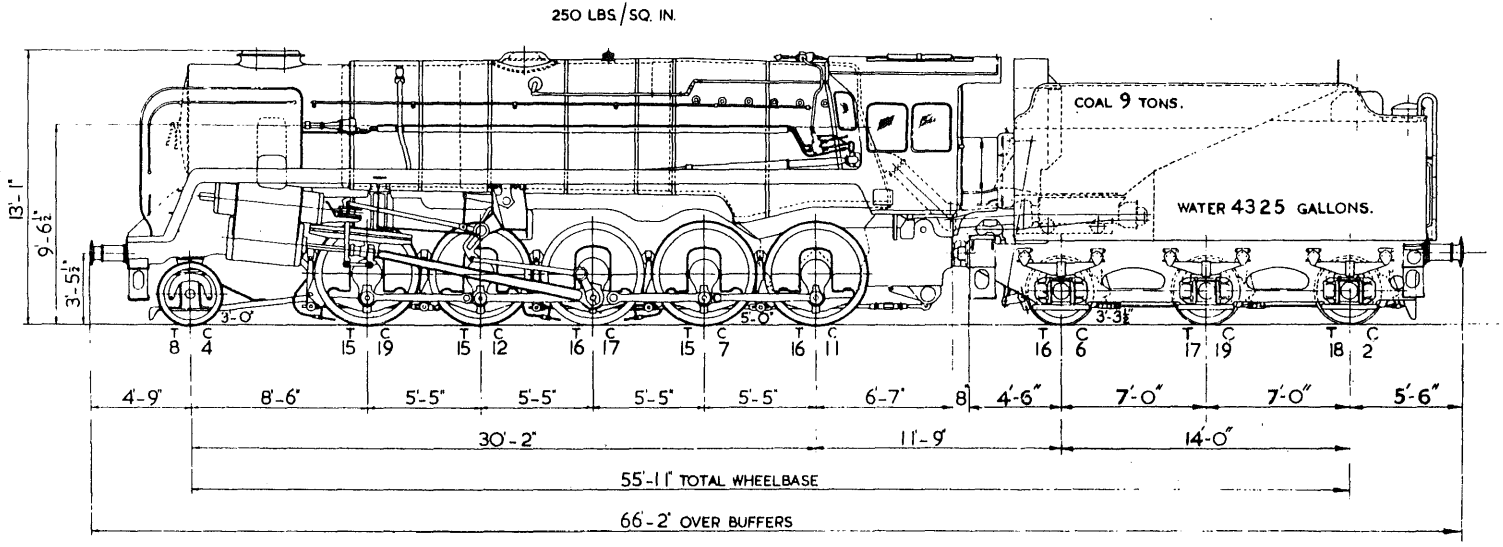

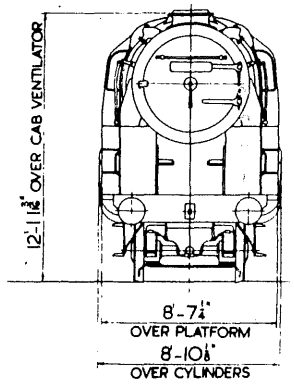

BOILER BARREL DIAMETER (OUTSIDE)	5'-9" INCREASING TO 6'-1"
FIREBOX (OUTSIDE)	7'-5⅛" LONG x 7'-0⅛" TO 6'-6 7/16" WIDE
TUBES	35 LARGE 5¼" O.D. x 7 S.W.G.
	138 SMALL 2" O.D. x 11 S.W.G.
SUPERHEATER ELEMENTS	1⅜" O.D. x 9 S.W.G.
LENGTH BETWEEN TUBEPLATES	15'-3"
HEATING SURFACES: TUBES	1836 SQ. FT.
FIREBOX	179 SQ. FT.
TOTAL EVAPORATIVE	2015 SQ. FT.
SUPERHEATER	535 SQ. FT.
FREE FLUE AREA	5·49 SQ. FT.
GRATE AREA	40·2 SQ. FT.

CYLINDERS (TWO)	20" x 28"
TRACTIVE EFFORT	39,667 LBS.
ADHESION FACTOR	4·56
BRAKE % ENGINE & TENDER	69·5
MINIMUM RADIUS CURVE WITHOUT GAUGE WIDENING	6 CHAINS (OR 4½ CHAINS DEAD SLOW)
BOILER TYPE	B.R. 9
TENDER TYPE	B.R. 1K.

WEIGHTS	FULL T	FULL C	EMPTY T	EMPTY C
ENGINE	88	10	79	16
TENDER	52	7	24	13
TOTAL	140	17	104	9

SCALE
0 2 4 6 8 10 FEET

B.R. STANDARD CLASS 9. 2-10-0 ENGINE

FITTED WITH MECHANICAL STOKER.

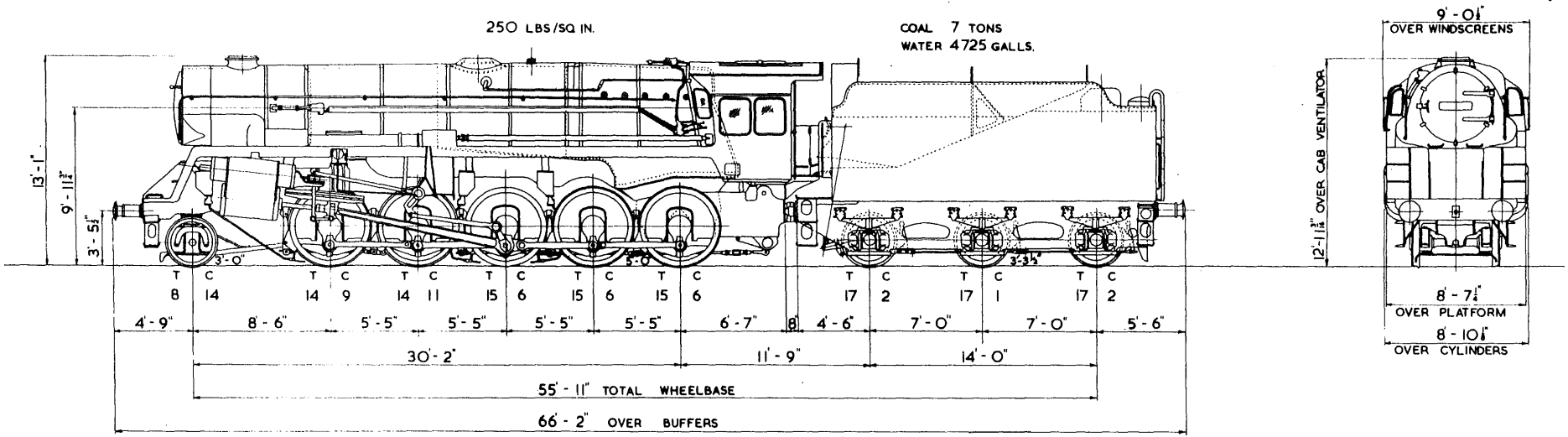

BOILER BARREL DIAMETER (OUTSIDE)	4'-11⅝" INCREASING TO 5'-7½"
FIREBOX (OUTSIDE)	7'-5½" LONG x 7'-0⅛" TO 6'-6 7/16" WIDE
TUBES	28 LARGE 5½" O.D. x 7 S.W.G.
	60 SMALL 2⅜" O.D. x 11 S.W.G.
SUPERHEATER ELEMENTS	1¼" O.D. x 9 S.W.G.
LENGTH BETWEEN TUBEPLATES	16'-5"
HEATING SURFACES: TUBES	1274 SQ. FT.
FIREBOX	158 SQ. FT.
TOTAL EVAPORATIVE	1432 SQ. FT.
SUPERHEATER	411 SQ. FT.
FREE FLUE AREA	4·59 SQ. FT.
GRATE AREA	40·2 SQ. FT.

CYLINDERS (TWO)	20" x 28"
TRACTIVE EFFORT	39,667 LBS.
ADHESION FACTOR	4·23
BRAKE % ENGINE & TENDER	72·00%
MINIMUM RADIUS CURVE WITHOUT GAUGE WIDENING	6 CHAINS (OR 4½ CHAINS DEAD SLOW)
BOILER TYPE	B.R.12
TENDER TYPE	B.R.1B.

WEIGHTS	FULL T C	EMPTY T C
ENGINE	83 12	77 3
TENDER	51 5	23 3
TOTAL	134 17	100 6

SCALE
0 2 4 6 8 10 FEET

B.R. CLASS 9. 2-10-0 CROSTI (CONVERSION) ENGINE.